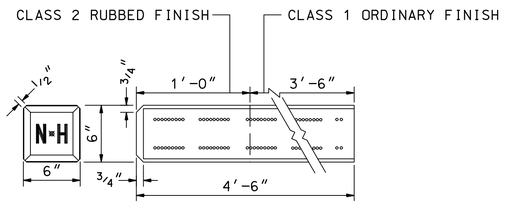

TOP

DETAIL OF CONCRETE BOUND

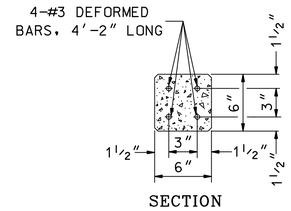

SECTION

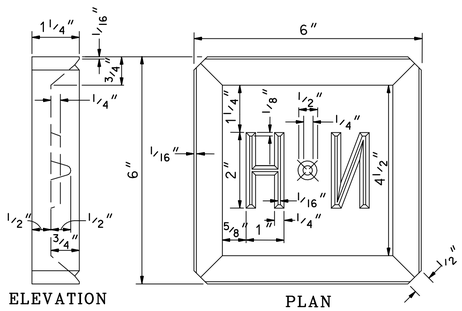

ELEVATION PLAN

DETAIL OF METAL FORM

GENERAL NOTES

1. CONCRETE SHALL BE CLASS A.
2. BOUNDS TO BE SET IN GRAVEL, 9" ON ALL SIDES OF AND UNDER BOUND.
3. WHEN BOUNDING NON-STATE RIGHT-OF-WAY FOR CITIES AND TOWNS, USE ITEM 622.4 - STONE BOUNDS.
4. ITEM 622.2 - CONCRETE BOUNDS.

NHDOT STANDARD PLANS	REV. DATE	PLATE
CONCRETE BOUND	06-16-2010	1
		STANDARD HR-2

TYPICAL TREATMENT OF RAISED ISLAND TO PROVIDE BLOCKOUTS FOR SIGNING AND DELINEATION

GENERAL NOTES

1. ISLANDS LESS THAN 16'-0" LONG REQUIRE ONLY ONE 18" CIRCULAR BLOCKOUT LOCATED AT THE MIDPOINT.
2. ADDITIONAL SIGNING BLOCKOUTS SHALL BE PROVIDED OPPOSITE ALL DRIVEWAYS AND SIDE ROAD APPROACHES.
3. BLOCKOUTS SHALL BE BACKFILLED WITH 2" OF COLD PATCH. BLOCKOUTS AND COLD PATCH ARE SUBSIDIARY TO THE RAISED ISLAND CONSTRUCTION.
4. IT MAY BE NECESSARY TO ADJUST THE LOCATION OF BLOCKOUTS TO AVOID UTILITY STRUCTURES OR PEDESTRIAN CROSSWALK OPENINGS.

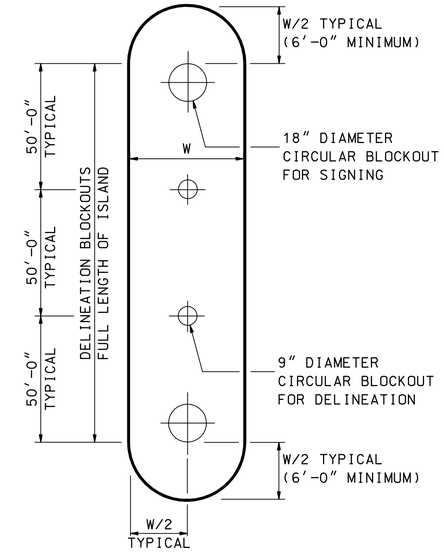

NHDOT STANDARD PLANS	REV. DATE	PLATE
RAISED ISLAND BLOCKOUTS	06-16-2010	2
		STANDARD HR-2

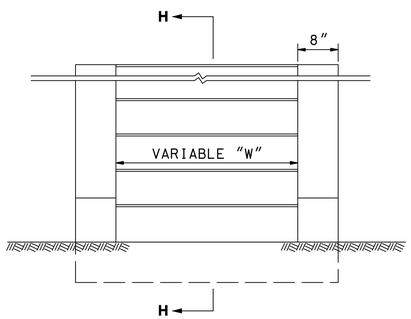

ELEVATION

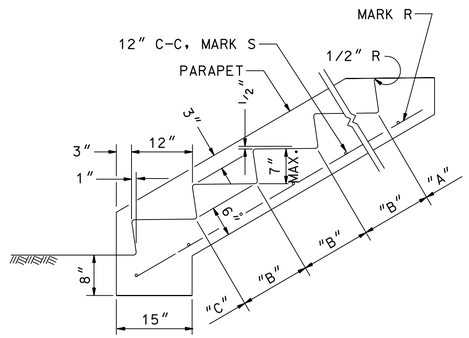

SECTION H-H

REINFORCING STEEL			
MARK	SIZE	NUMBER	LENGTH (EACH)
R	#5 1.043#/FT.	1 EA. PARAPET 1 EA. FT. OF WIDTH "W"	8" FOR "A" +13" EACH "B" +16" FOR "C"
S	#4 0.668#/FT.	1 FOR "A" 1 FOR "B" 2 FOR "C"	6" EA. PARAPET +12"/FT. OF WIDTH "W"

NHDOT STANDARD PLANS	REV. DATE	PLATE
CONCRETE STEPS	06-16-2010	3
		STANDARD HR-2

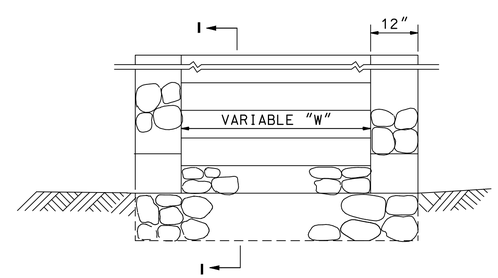

ELEVATION

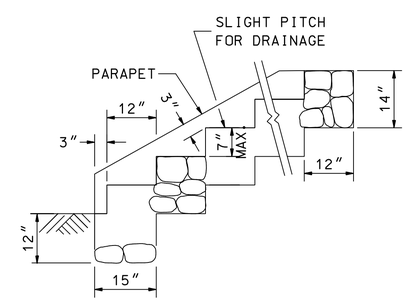

SECTION I-I

NHDOT STANDARD PLANS	REV. DATE	PLATE
MORTAR RUBBLE MASONRY STEPS	06-16-2010	4
		STANDARD HR-2

STANDARD NO. HR-2

REVISION DATE
07-13-2001
06-16-2010

*.DGN FILE NAME
HR-2

STANDARD PLANS

New Hampshire DOT Department of Transportation

STANDARD NO. HR-2