STATE OF NEW HAMPSHIRE

BRIDGE DESIGN MEMORANDUM

FROM: Mark W. Richardson, PE
Administrator

DATE: March 4, 2014
AT (Office): Bureau of Bridge Design

SUBJECT: **Design Memorandum 2014-02 (Revision)**
Bridge Deck Expansion Joints

TO: **Bureau of Bridge Design staff, Bridge Design Consultants, FHWA, NHDOT Bureaus**

The following are revisions made to the Design Memorandum 2014-02:

BDM Section	Affected Pages	Date of Revision	Revision Description	Background
Appendix 7.4-B1	Page 7.4-B1-1	3/4/14	Removed deck pvc drains and	The deck pvc drains were originally part of the detail to help prevent water reaching the concrete deck because the previous detail noted to have all the pavement and membrane removed. Since the new detail does not remove the deck membrane, the additional protection of the pvc drains are no longer needed.
Appendix 7.4-B3, Appendix 7.4-B4	Page 7.4-B3-1 to 7.4-B3-4, Page 7.4-B4-1 to 7.4-B4-2	3/4/14	Removed the top 1/2" x 5" steel curb plates. Vertical steel curb plates will remain and shall have length of 6". Sidewalk plates protecting the joint opening and top plates protecting the hooper for finger joints will remain.	The top plates were originally installed to protect the granite curb on the bridge. The bridges no longer use granite curb. When the fabricated joint is installed, the top plates typically will not match curb concrete. From discussion at the Bridge Issues of Common Concerns Meeting 1/28/14.
7.4.6	Page 7.4-11 to 7.4-12	3/4/14	Added Section 7.4.6, Reinforcement Detailing at Expansion Joints.	Addition made from discussion at Bridge Issues of Common Concerns Meeting 1/28/14.
		3/4/14	Revised Table of Contents to include Section 7.4.6	

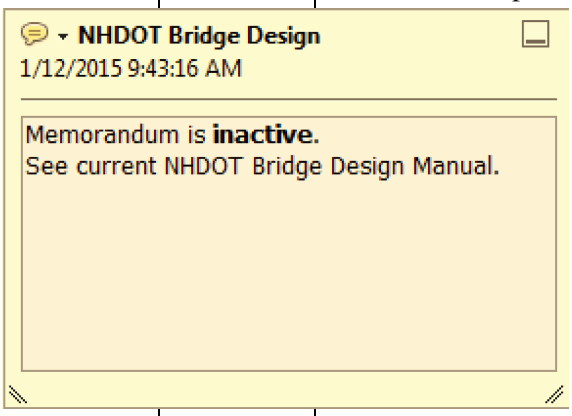

STATE OF NEW HAMPSHIRE
BRIDGE DESIGN MEMORANDUM

BDM Section	Affected Pages	Date of Revision	Revision Description	Background
Appendix 7.4-B1	Page 7.4-B1-1 to 7.4-B1-3	3/4/14	Revised "Sawed bituminous pavement" note to: *Sawed bituminous pavement (Notch curbs at end of deck before paving. Remove pavement, top layer only, to saw cut line.) (All costs subsidiary to Item 559.41)* From: ~~Sawed bituminous pavement (Remove pavement and membrane back to sawcut) (All costs subsidiary to Item 559.41)~~	Removing the membrane takes away the protection to the deck. Bureau of Bridge Maintenance has seen the sawcut go into the concrete bridge deck and felt removing the top coat depth is adequate for crack control. From discussion at the Bridge Issues of Common Concerns Meeting 1/28/14.
Appendix 7.4-B2	Page 7.4-B2-1 to 7.4-B2-3	3/4/14	Revised "Sawed bituminous pavement" note to: *Sawed bituminous pavement (Notch curbs at end of deck before paving. Remove pavement and membrane to saw cut line.) (All costs subsidiary to Item 559.41)* From: ~~Sawed bituminous pavement (Remove pavement and membrane back to sawcut) (All costs subsidiary to Item 559.41)~~	Clarified wording.
Appendix 7.4-A3	Page 7.4-A3-3 to 7.4-A3-12	3/4/14	Included pages 3-12 that were inadvertently left out.	

STATE OF NEW HAMPSHIRE

BRIDGE DESIGN MEMORANDUM

FROM: Mark W. Richardson, PE
Administrator

DATE: January 22, 2014
AT (Office): Bureau of Bridge Design

SUBJECT: **Design Memorandum 2014-02**
Bridge Deck Expansion Joints

TO: **Bureau of Bridge Design staff, Bridge Design Consultants, FHWA, NHDOT Bureaus**

The Bureau of Bridge Design is updating the Bridge Design Manual. During this process, certain completed sections of the new manual are being issued for immediate implementation. Consequently, the Bridge Design Manual and Bridge Detail Sheets have been modified as follows:

A. Bridge Design Manual

- New Chapter 7, Section 4
- New Appendix 7.4-A1 through A7
- New Appendix 7.4-B1 through B12

B. Bridge Details:

- Compression Seal Expansion Joint (behind and in front of backwall)
- Strip Seal Expansion Joint (behind and in front of backwall)
- Asphaltic Plug Expansion Joint
- Asphaltic Plug for Crack Control
- Anchor Details
- Backing Plate Detail for Finger Exp. Joint and Plow Plates
- Field Splice Weld Details

C. Supplemental Specifications:

- New SS Section 520
- New SS Section 559
- New SS Section 560
- New SS Section 561

D. Summary: The above noted revisions are being implemented to specify the following:

- Additional guidance to *AASHTO LRFD Bridge Design Specifications* regarding bridge deck expansion joints.
- Types of NHDOT bridge deck expansion joints and their use defined.
- All bridge deck expansion joints must be designed.
- It is preferred that all deck expansion joints be located *behind* the backwall for movements less than or equal to 4-in. Seal sizes are to be designed by the Designer and noted on the plans. (Two manufacturers shall be noted.)
- Compression seals shall be designed to always be in a state of compression.
- The 6-in. asphaltic plug joint is *not* an expansion joint. It shall be used for crack control at all *fixed* ends of the bridge and at expansion ends for movements ≤ ¼".
- For strip seals, only a 4-in. seal shall be used. (There is only one manufacturer of a 5-in. strip seal.)
- Sealing elements for modular joints shall be mechanically locked (strip seal type).

- Changes to item expansion joint numbers and descriptions.
- Replacement compression seal and repair work shall be paid for under Item 560.131, Prefabricated Compression Seal Expansion Joint – Rehabilitation (F). Replacement strip seal and repair work shall be paid for under Item 561.131, Prefabricated Strip Seal Expansion Joint – Rehabilitation (F).
- NHDOT Standard Specification Section 566 Elastomeric Joint Seal has been *removed*. It was being used for replacement of longitudinal bridge compression seals and concrete pavement seals. All existing longitudinal compression seals replaced between bridge decks shall use Item 560.131. All new or replacement seals used for concrete pavement shall require a special provision. The concrete pavement seal has different properties and testing requirements compared to the bridge joint compression seal. A special provision will be required if a concrete pavement seal.
- The sliding material between the backwall and deck has been changed. It is the same product (UHMW-PE) but now it will have a rubber back on one side so it can be bonded to the concrete backwall and a built-up section made and placed in the deck. Older installations of the UHMW-PE have been moving out of the deck-over-backwall joint because the material cannot be bonded unless it is treated for bonding.
- The closed cell expansion material has changed to a different grade. The closed cell material to be used as a compressible/expansion material between pours for full-depth protection has lower physical properties than what was previously called for and is lower in price.
- The closed cell expansion material used for a *bridge expansion joint* shall be included in the Item 559.6, Closed Cell Expansion Joint System. This item is covered in a special provision that includes the header, bonding material and closed cell expansion material (higher physical properties) as a bridge joint system.
- Details of each expansion joint for asphaltic plug, compression and strip seal joints. Sample plans of a finger and modular joint and plow plates.
- The Bridge Details and Sample Plans (.dgn and .pdf format) are located on the Bureau of Bridge Design web page:
  http://www.nh.gov/dot/org/projectdevelopment/bridgedesign/bridgedetails/index.htm
  http://www.nh.gov/dot/org/projectdevelopment/bridgedesign/sampleplans/index.htm

E. Background:

This memorandum incorporates the recommendations from *AASHTO LRFD Bridge Design Specification* and NHDOT Bureau of Bridge Maintenance, Bureau of Construction, Bureau of Highway Maintenance, and expansion joint Manufacturers.

NHDOT's current practice is to limit the number of bridge expansion joints due to numerous problems associated with the joints. However, there are locations where bridge expansion joints are needed.

The objective of a bridge expansion joint is to allow expansion and contraction of the bridge, seal the deck, and provide a smooth roadway riding surface. Many different bridge expansion joints have been used over the years and most have developed problems that have resulted in damage to the girders, bearings and substructure due to leakage or damage to the joint from plows.

STATE OF NEW HAMPSHIRE
BRIDGE DESIGN MEMORANDUM

NHDOT has placed more stringent limitations on the bridge expansion joints in order to improve each joint's performance. This Memorandum clarifies NHDOT's procedures/requirements for the design and construction of bridge expansion joints, and incorporates bridge detail sheets and details for use in contract plans.

F. Implementation:

The update to the Bridge Design Manual and the new Bridge Detail Sheets shall be implemented as of the date of this memo and shall be used on all applicable projects.

Mark W. Richardson, PE
Administrator, Bureau of Bridge Design

enclosures

Chapter 7 Superstructure

7.1	**Structural Steel**	7.1-1
7.2	**Bridge Inspection Access**	7.2-1
7.3	**Bridge Deck**	7.3-1
7.4	**Expansion Joints**	7.4-1
7.4.1	General Considerations	7.4-1
7.4.2	Preliminary Expansion Joint Selection Diagram	7.4-1
7.4.3	Design Criteria	7.4-8
7.4.4	Bridge Movements and Fixity	7.4-10
7.4.5	Review of Shop Drawings and Recording	7.4-11
7.4.6	Reinforcement Detailing at Expansion Joints	7.4-11
7.5	**Bearings**	7.5-1
7.6	**Traffic and Pedestrian Barrier**	7.6-1
7.6.1	Traffic Barrier	7.6-x
7.6.2	Temporary Traffic Barrier	7.6-x
7.6.3	Pedestrian Barrier	7.6-x

Appendix A

Appendix 7.4-A1	Preliminary Expansion Joint Selection Diagram	7.4-A1-1
Appendix 7.4-A2	Asphaltic Plug Expansion Joint	7.4-A2-1
Appendix 7.4-A3	Compression Seal Expansion Joint	7.4-A3-1
Appendix 7.4-A4	Strip Seal Expansion Joint	7.4-A4-1
Appendix 7.4-A5	Finger Expansion Joint	7.4-A5-1
Appendix 7.4-A6	Modular Expansion Joint	7.4-A6-1
Appendix 7.4-A7	NHDOT Temperature Expansion Tables	7.4-A7-1

Appendix B

Appendix 7.4-B1	Asphaltic Plug for Crack Control Details	7.4-B1-1
Appendix 7.4-B2	Asphaltic Plug Expansion Joint Details	7.4-B2-1
Appendix 7.4-B3	Compression Seal Exp. Jt. Detail	7.4-B3-1
Appendix 7.4-B4	Strip Seal Exp. Jt. Detail	7.4-B4-1
Appendix 7.4-B5	Finger Expansion Joint Sample Plan	7.4-B5-1
Appendix 7.4-B6	Finger Expansion Joint Phase Constr. Sample Plan	7.4-B6-1
Appendix 7.4-B7	Modular Expansion Joint Sample Plan	7.4-B7-1
Appendix 7.4-B8	Plow Protection Plate Sample Plan	7.4-B8-1
Appendix 7.4-B9	Expansion Joint Behind Backwall Sample Details	7.4-B9-1
Appendix 7.4-B10	Expansion Joint Anchor Details	7.4-B10-1
Appendix 7.4-B11	Expansion Joint Field Splice Weld Details	7.4-B11-1
Appendix 7.4-B12	Expansion Joint Backing Plate Detail	7.4-B12-1

7.4 Expansion Joints

7.4.1 General Considerations

Expansion joints must accommodate cyclic and long-term structure movements in such a way as to minimize imposition of secondary stresses in the structure. Expansion joints must be water tight to prevent water runoff (particularly deicing chemicals) from damaging the supporting structural elements, and provide a relatively smooth riding surface over a long service life.

Expansion joints shall be designed according to the current *AASHTO LRFD Section 14.5, Bridge Joints*. Designers should carefully consider all factors for the design, including lateral displacements and/or bridge rotation on heavily skewed bridges, horizontal curved structures or very wide bridges. The limitation with respect to movement parallel to the joint (racking) must be considered when selecting and sizing the expansion joint.

Deck expansion joints add cost to the structure, increase maintenance requirements and should be used only when necessary. For all new designs, consideration shall be given to integral or semi-integral bridges with the expansion joint located between the end of the approach slab and sleeper slab (see Chapter 6 for details).

It is preferred that all deck expansion joints be located *behind* the backwall for movements less than or equal to 4-in. This type of joint would include: the asphaltic plug; compression; and strip seal expansion joint. For tall abutments, the backwall shall be a broken back type. If the deck expansion joint cannot be located behind the backwall due to scope of work, bridge geometry, or the movement is greater than 4-in., the deck expansion joint shall be placed in front of the backwall. The location of the deck expansion joint shall be approved by the Bridge Design Chief.

NHDOT's current practice is to limit the number of bridge deck expansion joints due to numerous problems associated with the joints. Expansion joints shall be placed on the high end of a bridge if only one joint is placed on the bridge. This is done to prevent the bridge from creeping downhill and to minimize the amount of water passing over the joint. Expansion joints located over bridge piers shall be avoided.

NHDOT snowplows now can adjust to any angle, but typically the blade is set at 37°. The snowplows are equipped with the JOMA 6000 plow edge carbide blades that conform to the shape of the roadways *and* into bridge joints openings. If an expansion joint has a skew between 32° and 42° left ahead (either direction on the interstate) *or* near this range, communication shall be made with the Bridge Design Chief, Bureau of Bridge Maintenance and the District Engineer on whether a plow protection plate should be placed on the expansion joint. The use of a plow plate will be decided on a project to project basis. Details of the plow protection plate are shown in Appendix 7.4-B8.

7.4.2 NHDOT Expansion Joint Types

Typical NHDOT expansion joints include: asphaltic plug; compression seal; strip seal; finger joint; and modular joint. Information indicating the joints expansion range, limitations and design examples are shown in Appendix 7.4-A1 through 7.4-A6. Details of each joint type are shown in Appendix 7.4-B1 through 7.4-B7. A preliminary expansion joint selection diagram is located in Appendix 7.4-A1.

A list of approved proprietary expansion joints is listed in the NHDOT Qualified Product List (QPL) located at http://www.nh.gov/dot/org/projectdevelopment/materials/research/products.htm under Section 559 Asphaltic Plug Expansion Joint; Section 560 Prefabricated Compression Seal

Expansion Joint; and Section 561 Prefabricated Expansion Joint. When designing an expansion joint, the designer shall use the most current proprietary joint information from the manufacturer's web site.

When the total longitudinal movement is ≤ ¼", no expansion joint is required. An asphaltic plug for crack control shall be placed on both ends of the bridge. The asphaltic plug for crack control shall also be placed on the fixed end of all bridges. See Appendix 7.4-B1 for details of the asphaltic plug for crack control.

A. Asphaltic Plug Expansion Joint

Asphaltic plug joints consist of flexible polymer modified asphalt (PMA) installed within a blockout over a steel plate and backer rod. The steel plate spans across the expansion gap to retain the PMA during its installation. Application guidelines must be carefully followed to assure successful performance. Many limitations are placed on this type of joint because past performance has shown that the PMA tends to creep, migrating out of the blockouts. The limitations for the asphaltic plug joint are listed in Appendix 7.4-A2 and details are shown on Figure 7.4.2-1 and on Appendix 7.4-B2. The asphaltic plug expansion joint can be used when the total longitudinal movement is > ¼" and ≤ ¾" *and* if the limitations noted in Appendix 7.4-A2 are met.

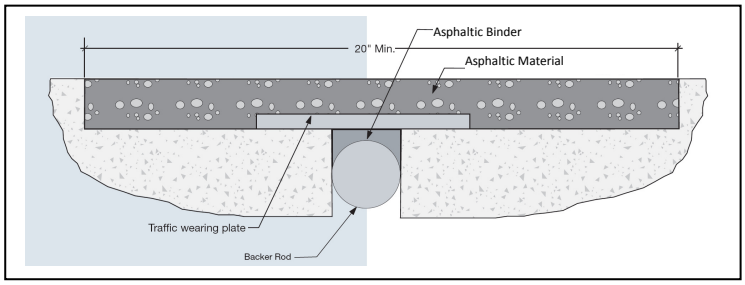

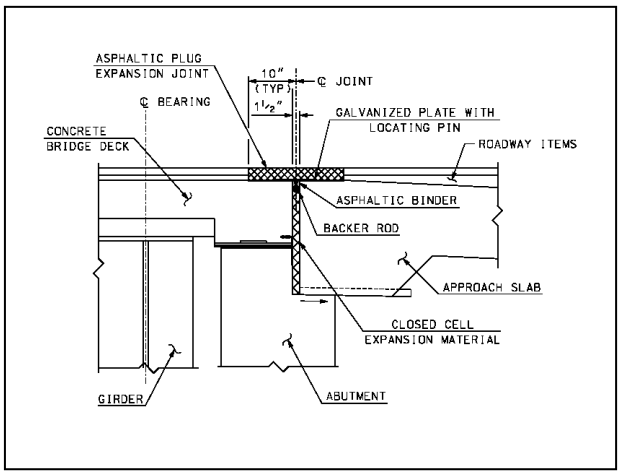

Asphaltic Plug Expansion Joint

Figure 7.4.2-1

B. Compression Seal Expansion Joint

Compression seal expansion joints are continuous preformed elastomeric sections with extruded internal web systems and are held in place by mobilizing friction against adjacent vertical faces of angles embedded into the concrete deck on each side of the expansion joint gap. They must be sized and installed to always be in a state of compression. If the skew of the expansion joint is greater than 30°, a compression seal shall not be used. The retainer bars (stop bars) serve as a ledge to prevent the seal from being forced down through the joint. The gap between the bottom of the seal and the retainer bars (stop bars) is needed to allow the bottom edge of the seal to rotate downward while the seal is being compressed. The limitations for compression seals are listed in Appendix 7.4-A3 and the details are shown below on Figure 7.4.2-2 & 3 and Appendix 7.4-B3. The compression seal expansion joint can be used when the total longitudinal movement is ≤ 2" *and* if the limitations noted in Appendix 7.4-A3 are met. It is preferred the compression seal expansion joint is used when possible (instead of the strip seal), due to less maintenance required.

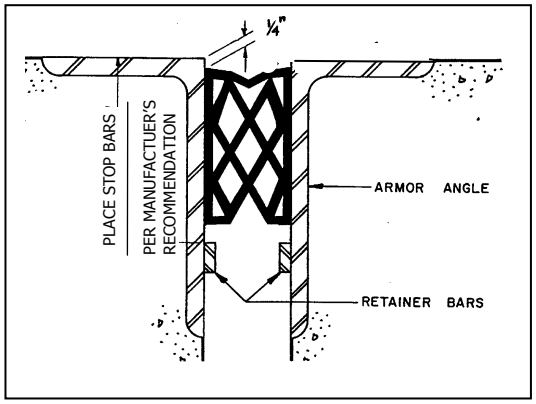

Compression Seal Expansion Joint

Figure 7.4.2-2

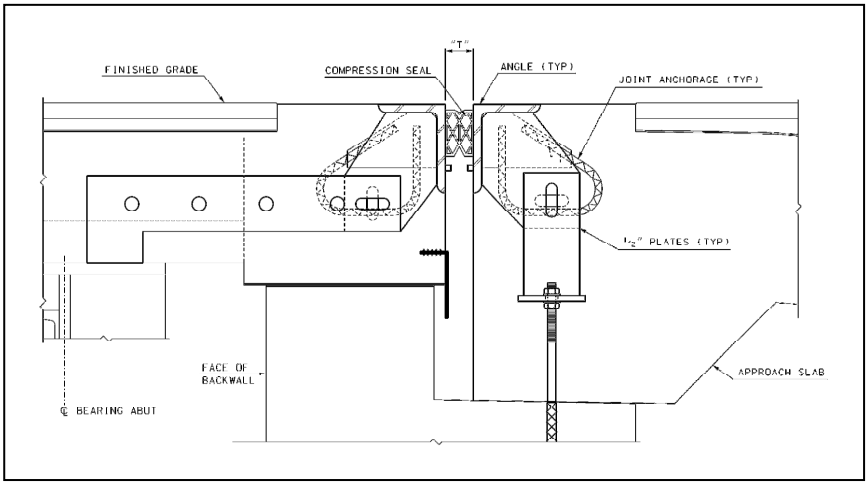

Compression Seal Expansion Joint Behind Backwall

Figure 7.4.2-3

C. Strip Seal Expansion Joint

Strip seal expansion joints consists of a preformed elastomeric gland mechanically locked into steel edge rails (extrusions) welded to angles embedded into the concrete deck on each side of an expansion joint gap. Provide cover plates on sidewalks, medians and pedestrian bridges to cover the opening. If the strip seal joint has a skew between 32° and 42° left ahead (either direction on the interstate), *or* near this range, communication shall be made with the Bridge Design Chief, Bureau of Bridge Maintenance and the District Engineer on whether a plow protection plate shall be placed on the expansion joint. The limitations for strip seals are listed in Appendix 7.4-A4 and the details are shown below on Figure 7.4.2-4, 5 & 6 and on Appendix 7.4-B4. The strip seal expansion joint can be used when the total longitudinal movement is ≤ 4" *and* if the limitations noted in Appendix 7.4-A4 are met.

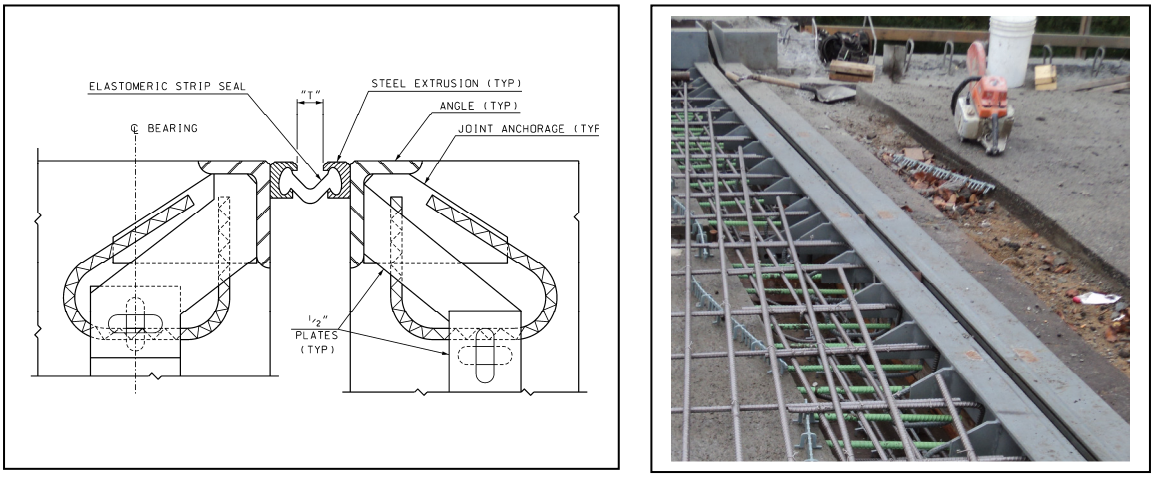

Strip Seal Expansion Joint

Figure 7.4.2-4

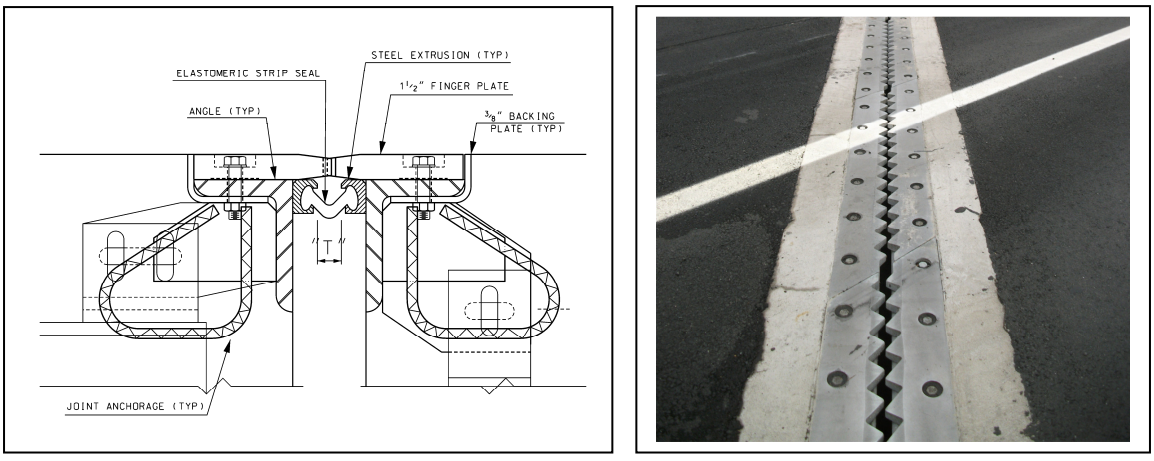

Strip Seal Expansion Joint with Plow Plate

Figure 7.4.2-5

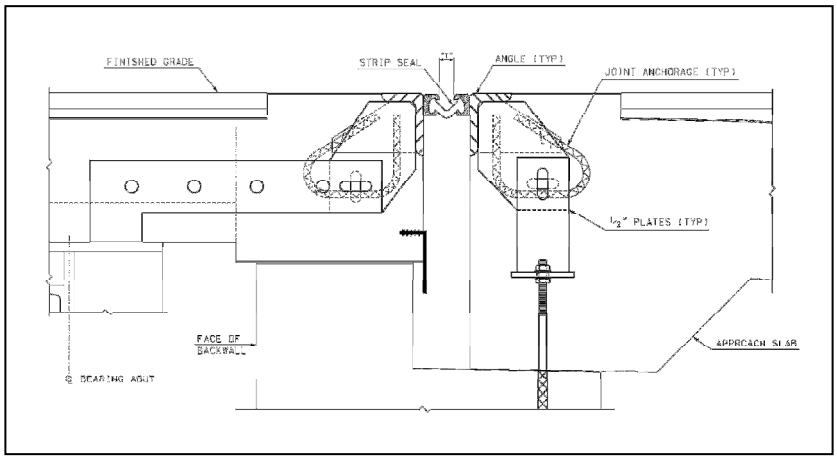

Strip Seal Expansion Joint
Behind Backwall

Figure 7.4.2-6

D. Finger Expansion Joint

Finger expansion joints are fabricated from steel plates and are installed in cantilevered configurations across expansion joint openings. The steel fingers must be designed to support traffic loads with sufficient stiffness to preclude excessive vibration. In addition to longitudinal movement, finger joints must also accommodate any rotations or differential vertical deflection across the joint. Since finger joints do not provide an effective seal against water infiltration, a fabric drain trough is installed beneath the finger joint to catch and redirect runoff water to downspouts. NHDOT's current finger joint limitations and design have evolved through the years with input from the Bureau of Maintenance, to take into account the difficulty of accessing the trough for maintenance and trying to remove the material that builds up in the trough. No plow protection plate is required for finger joints. The limitations for finger joints are listed in Appendix 7.4-A5 and the details are shown on Figure 7.4.2-5 and on Appendix 7.4-B6 & 7.

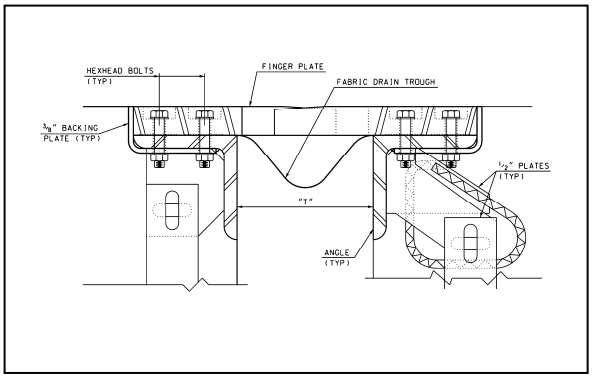

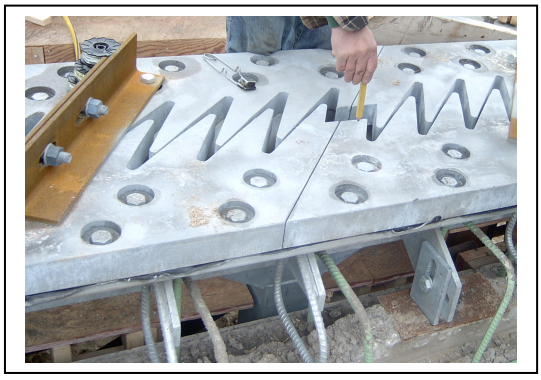

Finger Expansion Joint

Figure 7.4.2-5

E. Modular Expansion Joint

Modular expansion joints are complex, expensive, structural systems designed to provide watertight wheel load transfer across expansion joint openings. Modular expansion joints comprise a series of steel center beams oriented parallel to the expansion joint axis. Elastomeric strip seals attach to adjacent center beams, preventing infiltration of water and debris. The center beams are supported on support bars, which span in the primary direction of anticipated movement. The support bars are supported on sliding bearings mounted within support boxes. Polytetrafluoroethylene (PTFE) on stainless steel interfaces between elastomeric support bearings and support bars facilitate the unimpeded translation of the support bars as the expansion gap opens and closes. The support boxes rest on either cast-in-place concrete or grout pads installed into a preformed block out.

Modular expansion joints can be classified as either single support bar systems or multiple support bar systems. In multiple support bar systems, a separate support bar supports each center beam. In the more complex single support bar system, one support bar supports all center beams at each support location. This design concept requires that each center beam be free to translate along the longitudinal axis of the support bar as the expansion gap varies. This is accomplished by attaching steel yokes to the underside of the center beams. The yoke engages the support bar to facilitate load transfer. Precompressed elastomeric springs and PTFE on stainless steel interfaces between the underside of each center beam and the top of the support bar and between the bottom of the support bar and bottom of the yoke support each center beam and allow it to translate along the longitudinal axis of the support bar. Practical center beam span lengths limit the use of multiple support bar systems for larger movement range modular expansion joints. Multiple support bar systems typically become impractical for more than nine seals or for movement ranges exceeding 27-in. Hence, the single support bar concept typifies these larger movement range modular expansion joints.

The highly repetitive nature of axle loads predisposes modular expansion joint components and connections to fatigue susceptibility, particularly at center beam to support bar connections and center beam field splices. Bolted connections of center beams to support bar have demonstrated poor fatigue endurance. Welded connections are preferred, but must be carefully designed, fatigue tested, fabricated, and inspected to assure satisfactory fatigue resistance. NHDOT current specification for modular expansion joints includes stringent fatigue based design criteria for modular expansion joints. This specification also specifies criteria for manufacturing, shipping, storing, and installing modular expansion joints.

Modular expansion joints may need to be shipped and/or installed in two or more pieces and subsequently spliced together in order to accommodate project staging and/or practical shipping constraints. Splicing generally occurs after concrete is cast into the block outs. The center beams are elements that must be connected. These field connections are either welded, bolted, or a hybrid combination of both.

Center beam field splices have historically been the “weak link” of modular expansion joints because of their high fatigue susceptibility and their tendency to initiate progressive zipper-type failure. The reduced level of quality control achievable with a field operation in regard to a shop operation contributes to this susceptibility.

The limitations for modular expansion joints are listed in Appendix 7.4-A6 and the details are shown on Figure 7.4.2-6 &7 and Appendix 7.4-B7. The use of a modular joint shall be approved by the Bridge Design Chief.

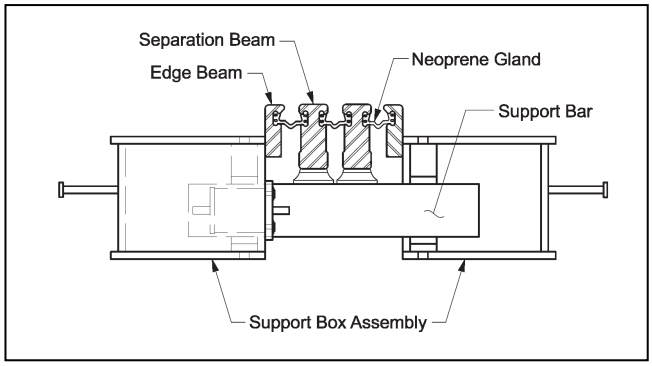

Modular Expansion Joint

Figure 7.4.2-6

Modular Expansion Joint

Figure 7.4.2-7

7.4.3 Design Criteria

Expansion joints and their supports shall be designed to withstand force effects and movements according to *AASHTO LRFD 14.5.1-2* as noted and considering the following:

- Creep
- Construction tolerances
- Temperature range
- Bearing type and direction of allowed movements
- Skew
- External restraints
- Seismic movements
- Snow plowing operations

With respect to seismic movements, it is assumed that some expansion joint damage may occur, that this damage is tolerable and that it will be subsequently repaired. In cases where seismic isolation bearings are used, the expansion joints must accommodate seismic movements in order to allow the isolation bearings to function properly.

A. Shrinkage Effects

Accurate calculation of shrinkage as a function of time requires that average ambient humidity, volume-to-surface ratios, and curing methods be taken in consideration as summarized in *AASHTO LRFD Article 5.4.2.3*, "In the absence of more accurate data, the shrinkage coefficients may be assumed to be 0.0002 after 28 days and 0.0005 after one year of drying." Because expansion joint devices are generally installed in their respective blockouts at least 30 to 60 days following concrete deck placement, they must accommodate only the shrinkage that occurs from that time onward [assume 0.0005 – 0.0003 (60 days of shrinkage that already occurred) = 0.0002]. For most situations, shrinkage strain can be assumed to be 0.0002 for normal weight concrete in an unrestrained condition.

This value must be corrected for restraint conditions imposed by various superstructure types.

$M_S = \beta \cdot \mu \cdot L_{trib}$

where:

L_{trib} = tributary length of the structure subject to shrinkage

β = ultimate shrinkage strain after expansion joint installation; estimated as 0.0002 in lieu of more refined calculations *(AASHTO 5.4.2.3.1)*

μ = restraint factor accounting for the restraining effect imposed by superstructure elements installed before the concrete slab is cast

= 0.0 for steel girders
(Although the concrete deck will shrink after placement, the typical shear stud attachment of the deck to the steel superstructure will cause the shrinkage to dissipate in small cracks throughout the expansion length rather than accumulating at the end. Therefore, shrinkage need not be considered for steel superstructures.)

= 0.5 for precast prestressed concrete girders *(WSDOT)*

= 0.8 for concrete box girders and T-beams *(WSDOT)*

= 1.0 for concrete flat slabs *(WSDOT)*

B. Thermal Effects

Bridges are subject to all modes of heat transfer: radiation, convection, and conduction. Each mode affects the thermal gradients generated in a bridge superstructure differently. Climatic influences vary geographically resulting in different seasonal and diurnal average temperature variations. Additionally, different types of construction have different thermal "inertia" properties. For example, a massive concrete box girder bridge will be much slower to respond to an imposed thermal stimulus, particularly a diurnal variation, than would a steel plate girder bridge composed of many relatively thin steel elements.

Variation in the superstructure average temperature produces elongation or shortening. Therefore, thermal movement range is calculated using the maximum and minimum anticipated bridge superstructure average temperatures anticipated during the structure's lifetime. The following are the maximum and minimum anticipated bridge superstructure average temperatures for design in New Hampshire:

Concrete Bridges:	$0° F$ to $^{+}80° F$	($\Delta T = 80° F$)
Steel Bridges:	$^{-}20° F$ to $^{+}105° F$	($\Delta T = 125° F$)

Total thermal movement range is then calculated as:

$M_t = \alpha \cdot L_{trib} \cdot \Delta T$

where:

L_{trib} = tributary length of the structure subject to thermal variation

α = coefficient of thermal expansion; 0.000006 in./in./°F for concrete and 0.0000065 in./in./°F for steel *(AASHTO 6.4.1 and 5.4.2.2)*

ΔT = bridge superstructure average temperature range as a function of bridge type and location.

The expansion length is measured along the centerline of the bridge and the length is normal to the joint opening for structures with a zero skew. The length of superstructure affecting the movement at one of its joints shall be the length from the joint being considered to the structure's neutral point.

Expansion joint openings need to be checked for the temperature drop from the normal construction installation temperature (65° F for compression and strip seals, 45° F for finger joints), shrinkage, *and* the total closing movement due to temperature rise from the installation temperature.

Most expansion joint devices are installed in pre-formed concrete blockouts some time after the completion of the bridge deck. The expansion joint device must be cast into its respective blockout with a gap setting corresponding to the ambient superstructure average temperature at the time the blockouts are filled with concrete. In order to accomplish this, expansion device gap settings must be specified on the contract drawings as a function of superstructure ambient average temperature. Generally, these settings are specified in the temperature adjustment table for temperatures of: 20° F; 35° F; 50° F; 65° F; 80° F; and 95° F.

C. Load Factor γ_{TU}, for Force Effect due to Uniform Temperature, TU

A load factor γ_{TU} of 1.2 *(AASHTO Table 3.4.1-1)* shall be applied when calculating the movement due to temperature change for sizing all expansion joints, *except* for the asphaltic plug joint. The exception for the asphaltic plug joint is because the joint does not require sizing and it is designed for only a small movement.

The load factor γ_{TU} shall *not* be applied when determining the joint widths for the adjustment temperature table. See design examples in Appendix 7.4-A2 through A6.

D. Foundation Movement Effects

Typical construction requires backfilling abutments up to bridge seat elevations prior to construction of the deck slab. Therefore, abutment tip does *not* need to be considered in sizing the expansion joint as stated in *AASHTO Section 14.5*. However, if construction of the bridge is such that abutment tip should be considered in sizing joints, then abutment tip may be estimated as follows unless more accurate information is available:

M_{tip} = Movement due to abutment tip
= ¼" abutment tip for 10 ft. of abutment height

7.4.4 Bridge Movements and Fixity

To determine movements for joints (and bearings), the point of fixity must be established for the bridge. The point of fixity is the neutral point on the bridge that does not move horizontally as the bridge experiences force effects and movement.

Because the movement restriction imposed by a bearing must be compatible with the movements allowed by the adjacent expansion joint, expansion joints and bearings must be designed interdependently and in conjunction with the anticipated behavior of the overall structure.

The longitudinal stiffness is a function of the interaction between pier stiffnesses, bearing types and joint locations. The following shall be considered when determining bridge fixity and longitudinal stiffness:

- For single span structures, the low end of the bridge should be a fixed bearing. This is done to prevent the bridge from creeping downhill and to minimize the amount of water passing over the joint.
- Expansion joints located over bridge piers should be avoided.
- Minimize the number of expansion joints.
- For very wide bridges, horizontally curved bridges, and bridges with large skews, the impacts of transverse movement and forces shall be considered.
- Expansion bearings should be compatible with movements of the expansion joint.
- The subsurface conditions play a factor in the distribution of horizontal loads (e.g. braking force or expansion bearing friction force) to the substructure and foundation.
- The number and location of expansion joints is determined based on a maximum joint opening at the ends of the bridge.
- Tall flexible piers deflect.

7.4.5 Review of Shop Drawings and Recording

Shop drawings should be reviewed for conformance with the provisions of Section 105 of the *NHDOT Standard Specifications for Road and Bridge Construction* and for general conformity with the contract plans and proposal. See Chapter 1, Section 1.3.6 for additional shop drawing review procedures.

The following is a guide for checking expansion joint shop drawings:

- Items should be checked for *general conformity* against the contract plans, proposal, addenda, special provisions and standard specifications.
- Material specifications.
- Size and type of seal, members and fasteners.
- Dimensions shown on contract plans.
- Finish (surface finish, galvanizing, painting, etc.).
- Weld size, type, and procedures.
- Anchorage assembly.
- Adequacy of details.
- Fabrication (welding and assembly procedures).
- Phase construction assembly.

The designer shall input the seal size and type that was shown on the shop drawings, into the Bureau of Bridge Design Data Base, Bridge Particulars. This will record the expansion joint seal size and type for any future replacement by Bridge Maintenance.

7.4.6 Reinforcement Detailing at Expansion Joints

Reinforcement in the deck, backwall, and approach slab can conflict with the installation of prefabricated expansion joints, especially when the bridge is skewed. The designer shall detail the reinforcement to avoid possible conflicts with the joint anchors and support boxes. The prefabricated expansion joint shop plans shall also be reviewed for any possible conflicts prior to construction of the backwall, approach slab and deck blockout.

The following shall be included in detailing the bridge reinforcement near prefabricated compression, strip, finger, and modular expansion joints (See Figure 7.4.6-1, 2 & 3):

- All plan details located at the expansion joint shall show an assumed outline of the proposed joint including the anchors and support boxes.
- With the expansion joint outline in the detail, the designer shall layout the reinforcing to avoid possible conflicts with the joint.
- A note shall be included on the reinforcing plan detail stating:

  "The reinforcing layout shown is based on an assumed expansion joint design. The reinforcement may require adjustment in the field during the installation of the reinforcing, based on details as shown on the approved expansion joint shop drawings." (i.e., the deck and approach slab haunch hoop bars and longitudinal bars may be moved to avoid the expansion joint anchors.)

- If the bridge is skewed and the deck reinforcing is detailed normal (perpendicular) to the centerline of the roadway, the deck reinforcing (longitudinal and transverse) shall be dimensioned 6"± from the end of the deck, unless the design requires otherwise.

See Figure 7.4.6-1 for example of detailing reinforcement near a prefabricated modular expansion joint.

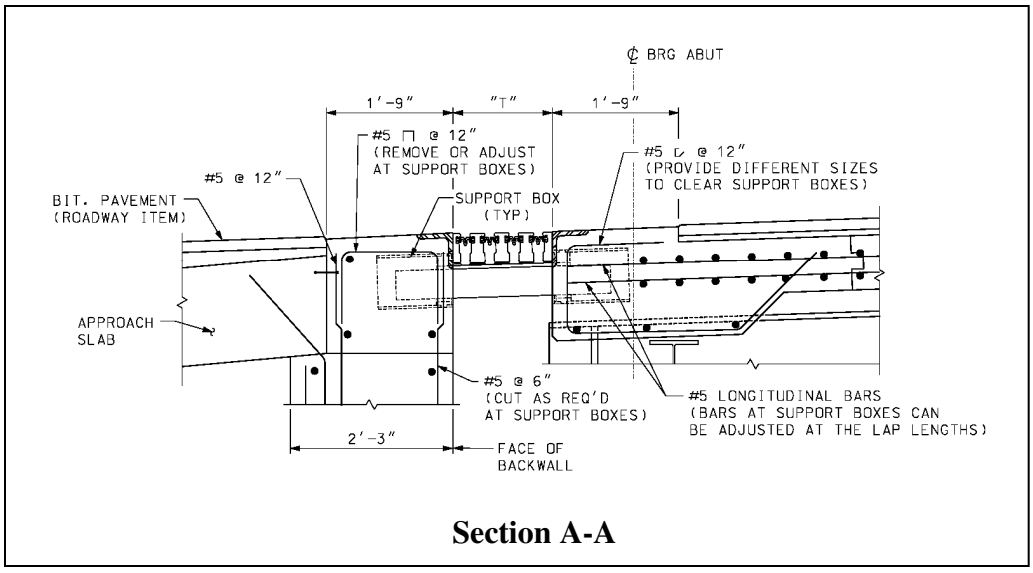

Section A-A

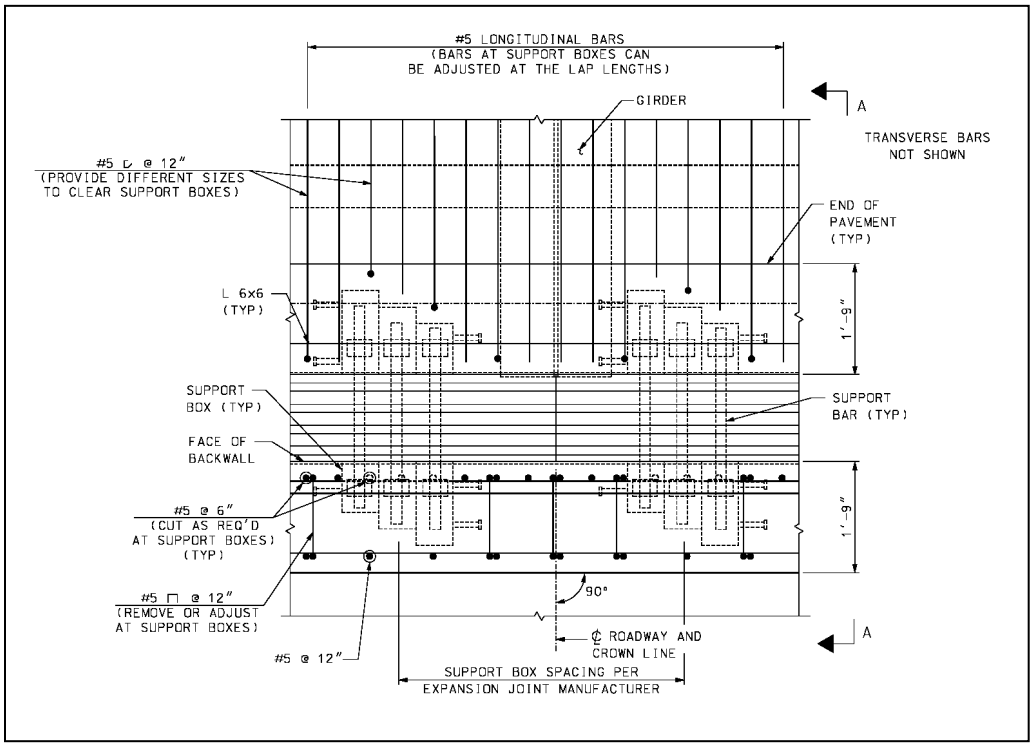

Modular Expansion Joint
Example of Reinforcing Detailing

Figure 7.4.6-1

Modular Expansion Joint Reinforcing

Figure 7.4.6-2

Finger Expansion Joint Reinforcing

Figure 7.4.6-3

Page intentionally left blank.

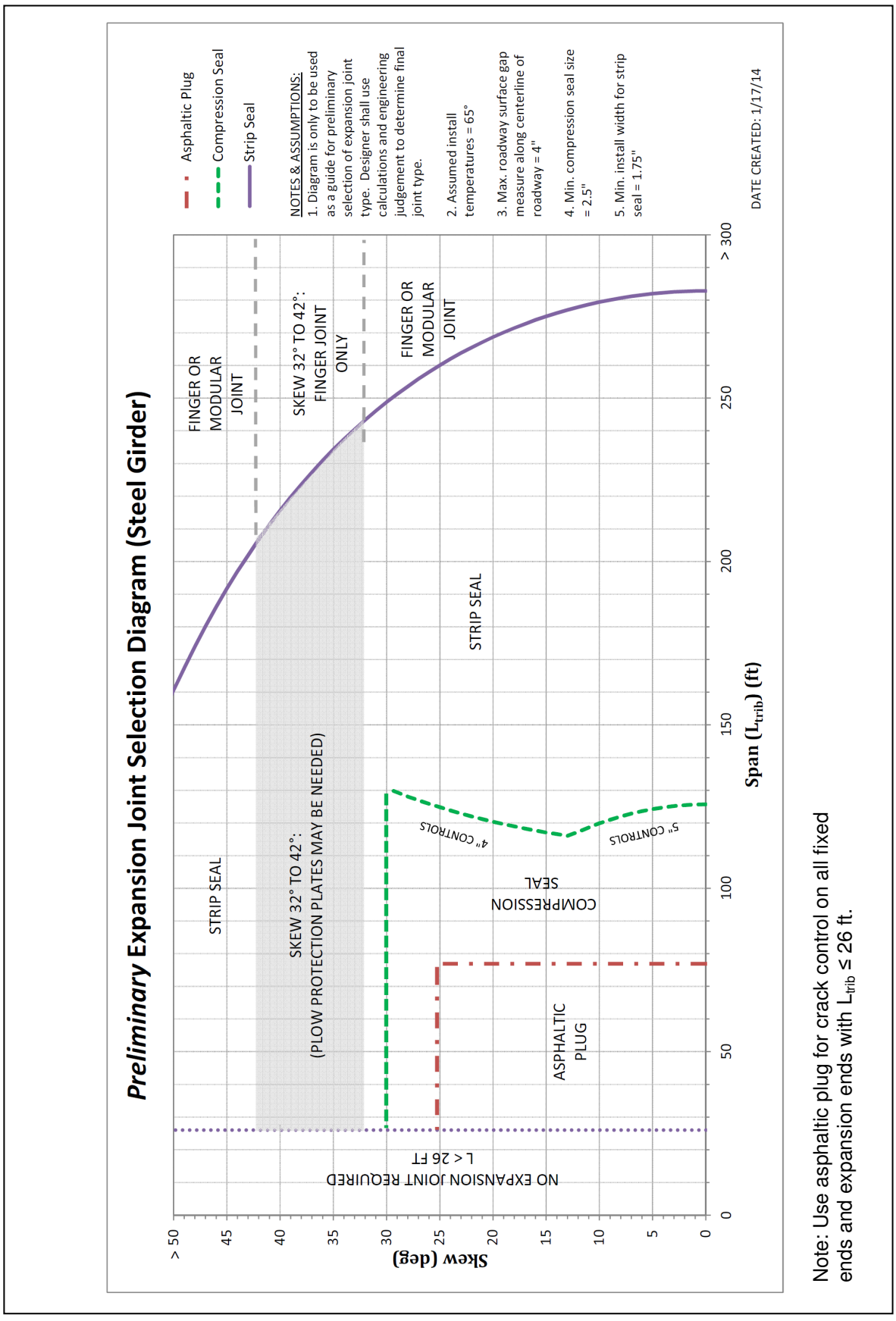

Note: Use asphaltic plug for crack control on all fixed ends and expansion ends with $L_{trib} \leq 26$ ft.

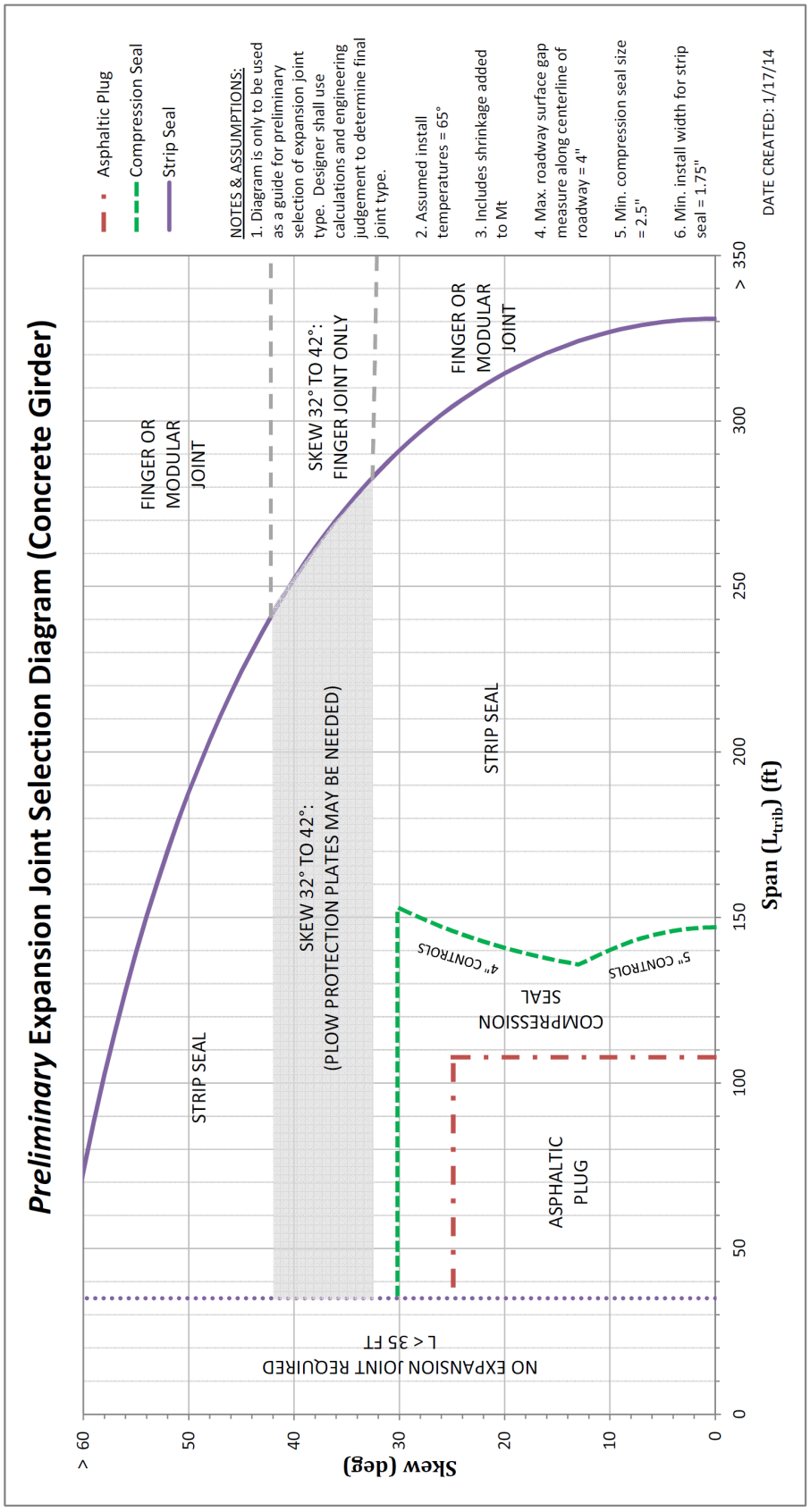

Note: Use asphaltic plug for crack control on all fixed ends and expansion ends with $L_{trib} \leq 35$ ft.

Asphaltic Plug Expansion Joint Limitations

An asphaltic plug expansion joint may be used with the following limitations (See Appendix 7.4-B2 for an asphaltic plug expansion joint detail):

- 1/4" < total movement of expansion joint measured along center line of bridge (expansion and contraction) ≤ 3/4".
- Do *not* apply the load factor γ_{TU} of 1.2 when calculating the movement due to temperature change.
- Skew of joint ≤ 25°
- Do not use at stop and start traffic locations (such as intersections).
- Do not use on a 3-lane (same direction) highway, unless approved by the Bridge Design Chief.
- Do not use on a 2-lane (same direction) highway with an ADT ≥ 15,000, unless approved by the Bridge Design Chief.
- Do not use on a 2-lane (opposite direction) highway with an ADT ≥ 15,000 unless approved by the Bridge Design Chief.
- Each project on a 2-lane (opposite direction) highway with an 8,000 ≤ ADT ≤ 15,000, shall be reviewed by the Bridge Design Chief *and* the Bureau of Bridge Maintenance for the traffic control required for any future repair work.
- Each project on a 2-lane (opposite direction) highway with an ADT < 8,000, shall take into account if traffic control is feasible for any future repair of the plug joint, as approved by the Bridge Design Chief.
- Minimum joint installation depth = 2" (measured from top of deck to top of pavement).
- Standard joint width = 20"
- Maximum gradient at joint location = 4%

Page intentionally left blank.

Compression Seal Expansion Joint Limitations

A compression seal expansion joint may be used with the following limitations (See Appendix 7.4-B3 for a compression seal joint detail. See p 7.4-A3-3 for design notations and p. 7.4-A3-4 & 9 for design examples):

- 1/4" < total movement of expansion joint measured along center line of bridge (expansion and contraction) ≤ 2.0".
- Skew of joint ≤ 30°
  - ⇒ This is different than *AASHTO 14.5.6.6* recommendation skew of joint < 20°.
  - ⇒ Limitation chosen after review of Maine DOT's compression seal testing. See Maine DOT Bridge Design Guide located at: http://www.maine.gov/mdot/technicalpubs/documents/pdf/brgdg/chapter4superstructurefinal.pdf - Deck Joints and Expansion Devices
  - ⇒ The compression seal loses its ability to absorb "racking" movement with larger skews.
- It is preferred the compression seal expansion joint is used when possible (instead of the strip seal), due to less maintenance required.
- No splices of the seal shall be allowed.
- Nominal uncompressed width of seal (W) shall be: 2.5"≤ W ≤ 5" (*AASHTO 14.5.6.6;* Bureau of Bridge Maintenance feels a seal larger than 5" does not perform well.)
- Maximum roadway surface gap (measured along center line of bridge) ≤ 4.0" *(AASHTO 14.5.3.2).*
- W = nominal uncompressed width of seal
  - ⇒ Max. joint opening = 0.85W
  - ⇒ Min. joint opening = 0.40W
  - ⇒ Max. shear displacement (racking) = 0.20W
- The expansion gap should be set so the compression seal can be replaced over a reasonably wide range of construction temperatures. Show the gap width on plans as a function of the superstructure temperature.
- The typical construction installation temperature is 65°F.
- For skewed joints:
  - ⇒ Bridge deck movement must be separated into components perpendicular and parallel to the joint axis (See design example).
- Concrete blockouts are required for the installation of a compression seal expansion joint.
- Anchorage of the compression seal expansion joint to the backwall and deck, between the curb lines, shall be made using a loop rebar and shall be spaced at 1'-0" maximum. Brush curb and sidewalk anchorage shall be made of stud anchors and shall be spaced at 1'-6" maximum. The anchorage reinforcement shall extend into the backwall or curb reinforcement cage for proper anchorage.
- Stop bars shall be continuously welded (top and bottom) to prevent rust forming behind the bars.

Compression Seal Joint Dimension Table

Uncompressed					
Seal Width "W"	**Seal Height**	**Min. Joint Width**	**Max. Joint Width**	**Min. Install Width**	**Min. Joint Depth**
2 ½	2 ½	1 ⅛ ±	2 ⅛	1 ½	3 ½ ±
3	3 ¼ ±	1 ⅜ ±	2 ½	1 ¾ ±	4 ¼ ±
3 ½	3 ½	1 ½ ±	3	2 ¼ ±	4 ½
4	4	1 ¾ ±	3 ⅜	2 ½ ±	5 ⅝ ±
5	5	1 ⅞ ±	4 ¼	3	6 ¼ ±

Note: This table shows approximate values for both Watson-Bowman seal (WA series) and D.S. Brown seal (CV & CA series). The fabricator's websites should be viewed for the current and exact dimensions. The minimum install width is 0.6*Seal Width for D.S. Brown (given by email from the representative on 8/2012).

Expansion Joint Design Notations

$M_{t(unfactored)}$ = Movement due to temperature (inches)
= $\alpha \cdot L_{trib} \cdot \Delta T \cdot (12$ in./1ft.)

ΔT = bridge superstructure average temperature range as a function of bridge type and location
= 80° F (0° F to $^{+}$80° F) for concrete bridges
= 125° F ($^{-}$20° F to $^{+}$105° F) for steel bridges

L_{trib} = tributary length of the structure subject to expansion or contraction

α = Coefficient of thermal expansion
= 0.0000060 in./in./°F for concrete
= 0.0000065 in./in./°F for steel

M_s = Movement due to shrinkage after construction (inches) (concrete beams)
= $\beta \cdot \mu \cdot L_{trib}$

β = shrinkage coefficient for reinforced concrete, 0.0002

μ = factor accounting for restraining effect imposed by superstructure elements installed before the concrete slab is cast
= 0.5 for precast prestressed concrete girders
= 0.8 for concrete box girders and T-beams
= 1.0 for concrete flat slabs

M_p = Movement parallel to joint (inches)

M_n = Movement normal to joint (inches)

γ_{TU} = Load factor for force effect due to uniform temperature, 1.2

θ = Skew angle

"T" = Joint opening normal to joint for the installation chart (inches)

A = Joint opening normal to joint

W = Nominal uncompressed width of expansion seal (inches)

W_{min} = Minimum expansion width (inches)

W_{max} = Maximum expansion width (inches)

$W_{install}$ = Expansion width at installation (inches)

T_{min} = Minimum superstructure temperature
= (0° for concrete bridges, $^{-}$20° F for steel bridges)

T_{max} = Maximum superstructure temperature
= ($^{+}$80° F for concrete bridges, $^{+}$105° F for steel bridges)

$T_{install}$ = Minimum installation superstructure temperature
= $^{+}$65° F (all bridges)

Compression Seal Joint Design Example (1)

Design Procedure

A. Movement Calculations

$M_t = (\alpha)(L_{trib})\ (\Delta T)(\ \gamma_{TU})(12"/')$

$M_s = (\beta)(\mu)(L_{trib})(12"/')$ (= 0 for steel bridges)

$M_{t\ longitudinal} = (M_t + M_s)$

$M_{t\ normal} = M_t \cos\theta$

$M_{s\ normal} = M_s \cos\theta$ (= 0 for steel bridges)

$M_p = (M_t + M_s)\sin\theta$

$M_n = (M_t + M_s)\cos\theta$

$\Delta T_{ratio\ min} = (T_{install} - T_{min})/(\Delta T)$

$\Delta T_{ratio\ max} = (T_{max} - T_{install})/(\Delta T)$

B. Selection of Seal Width (largest W value)

1. Max. joint opening = 0.85W
   Min. joint opening = 0.40W
   Hence, (0.85W – 0.40W) = 0.45W for total movement
   $M_n = 0.45W$
   Algebraic manipulation and solving for W yields:

   $W \geq M_n / 0.45$

2. Max. shear displacement = 0.20W
   $M_p = 0.20W$
   Algebraic manipulation and solving for W yields:

   $W \geq M_p / 0.20$

3. $W_{max} = W_{install} + [(\Delta T_{ratio\ min} \cdot M_{t\ normal}) + M_{s\ normal}] < 0.85W$
   Assume $W_{install} = 0.6W$
   Algebraic manipulation and solving for W yields:
   $W_{max} = 0.6W + [(\Delta T_{ratio\ min} \cdot M_{t\ normal}) + M_{s\ normal}] < 0.85W$
   Rearranging yields:

   $W \geq 4\ [(\Delta T_{ratio\ min} \cdot M_{t\ normal}) + M_{s\ normal}]$

$\Rightarrow$ Choose a seal size from manufacturer's chart

Compression Seal Joint Design Example (1) (con't)

C. Check Joint Opening for Install, Max. and Min. Temperatures

1. Install Temp. (65° F):

$A_{install}$ = manufacturer's min. install width

$\Rightarrow$ Set $A_{install}$

2. Min. Temp. :

$A_{max} = A_{install} + [(\Delta T_{ratio\ min} \cdot M_{t\ normal}) + M_{s\ normal}] \leq$ manufacturer's maximum opening

3. Max. Temp.:

$A_{min} = A_{install} - (\Delta T_{ratio\ max} \cdot M_{t\ normal}) \geq$ manufacturer's minimum opening

4. Min. Opening between *stop bars*:

$A_{min\ stop\ bars} = A_{min} - (2 \cdot 0.5$" stop bar width$) > 0$"

5. $A_{max\ longitudinal} \leq 4$" (*AASHTO 14.5.3.2)*

$A_{max\ longitudinal} = A_{max}/\cos\theta$

$\Rightarrow$ Confirm two different manufacturer seals (same size) meet all requirements.

$\Rightarrow$ The designer shall use judgment if $T_{install}$ needs to be adjusted in order to get a certain size seal to work. However, the designer needs to be aware at what the install temperature will mostly be (i.e. summer construction). If the designer decides the seal needs to be installed at a temperature lower than 65° F, the $T_{install\ min.}$ needs to be noted on the plan.

D. Calculate Temperature Adjustment Table

Calculate $M_{t\ longitudinal}$ *without* load factor, γ_{TU}

Design Example (1)

- **Steel girder**
- Total expansion length = 70'
- Skew angle = 27°
- Expansion joint at one abutment
- Value of Constants:

$\theta = 27°$

$\alpha = 0.0000065$ in./in./°F

$L_{trib} = 70'$

$\Delta T = 125°$ F (-20° F to $^{+}105°$ F)

$T_{install} = 65°$ F

$\gamma_{TU} = 1.2$

A. Movement Calculations

$M_t = (\alpha)(L_{trib})(\Delta T)(\gamma_{TU})$

$= (0.0000065$ in./in./°F$)(70')(125°$ F$)(1.2)(12"/')$

$= 0.82"$

Compression Seal Joint Design Example (1) (con't)

$M_{t\ normal} = M_t \cos\theta$
$= (0.82")\cos 27°$
$= 0.73"$

$M_s = 0$

$M_n = (M_t + M_s)\cos\theta$
$= (0.82" + 0)\cos 27°$
$= 0.73"$

$M_p = (M_t + M_s)\sin\theta$
$= (0.82" + 0")\sin 27°$
$= 0.37"$

$\Delta T_{ratio\ min} = (T_{install} - T_{min})/(\Delta T)$
$= (65° F - (-20°F)/(125° F)$
$= 0.680$

$\Delta T_{ratio\ max} = (T_{max} - T_{install})/(\Delta T)$
$= (105° F - 65° F)/(125° F)$
$= 0.320$

$M_{t\ longitudinal} = (M_t + M_s) = 0.82" \leq 2"$ (max. movement)

$\theta = 27° \leq 30°$

$\Rightarrow$ **OK**

B. Selection of Seal Width (largest W value)

1. $W \geq M_n / 0.45 = 0.73"/0.45 =$ 1.62"
2. $W \geq M_p / 0.20 = 0.37"/0.20 =$ 1.85"

governs ⟶ 3. $W \geq 4\ [(\Delta T_{ratio\ min} \cdot M_{t\ normal}) + M_{s\ normal}]$
$\geq 4\ [(0.680 \cdot 0.73") + 0] = 1.99"$

$\Rightarrow$ Try a 2.5" seal (Min. seal width per limitations.)

Joint Type	Joint Opening		Minimum Install	Nominal Width
	Minimum	Max		
WA-250	1.0"	2.125"	1.50"	2.5"
CV-2502	1.13"	2.13"	1.50"	2.5"

C. Check Joint Opening for Install, Max. and Min. Temperatures

1. Install Temp. (65° F):

$A_{install}$ = manufacturer's min. install width
$= 1.5"$

$\Rightarrow$ Set $A_{install} = 1.5"$

2. Min. Temp. :

$A_{max} = A_{install} + [(\Delta T_{ratio\ min} \cdot M_{t\ normal}) + M_{s\ normal}] \leq$ manufacturer's maximum opening

$A_{max} = 1.5" + [(0.680 \cdot 0.73") + 0]$
$= 2.0" < 2.13"$ **O.K.**

Compression Seal Joint Design Example (1) (con't)

3. Max. Temp. :

$A_{min} = A_{install} - (\Delta T_{ratio\ max} \cdot M_{t\ normal}) \geq$ manufacturer's min. opening

$A_{min} = 1.50" - (0.320 \cdot 0.73")$

$= 1.27" > 1.0"$ (WA-250) **O.K.**

$> 1.13"$ (CV-2502) **O.K.**

4. Min. Opening between *stop bars*:

$A_{min\ stop\ bars} = A_{min} - (2 \cdot 0.5"$ stop bar width$) > 0"$

$= 1.27" - (2 \cdot 0.5") = 0.27" > 0"$ **O.K.**

5. $A_{max\ longitudinal} \leq 4"$ (*AASHTO 14.5.3.2)*

$A_{max\ longitudinal} = A_{max}/\cos\theta$

$A_{max\ longitudinal} = 2.0/\cos 27° = 2.24" \leq 4"$ **O.K.**

⇒ **Use: 2. 5" compression seal (WA-250 or CV-2502)**

D. Calculate Temperature Adjustment Table

⇒ Note: Calculate $M_{t\ normal}$ *without* load factor, γ_{TU}

$M_{15°\ normal} = (\alpha)(L_{trib})(15°)(12"/')\cos 27°$

$= (0.0000065\ in./in./°F)(70')(15°F)(12"/')\cos 27°$

$= 0.073"$

"T" at $20° F = A_{install} + (3)(M_{15°\ normal}) = 1.719"$

$35° F = A_{install} + (2)(M_{15°\ normal}) = 1.646"$

$50° F = A_{install} + (1)(M_{15°\ normal}) = 1.573"$

$65° F = A_{install} = 1.5"$

$80° F = A_{install} - (1)(M_{15°\ normal}) = 1.427"$

$95° F = A_{install} - (2)(M_{15°\ normal}) = 1.354"$

Temperature Adjustment Table	
Temperature	**"T"**
20° F	1 3/4"
35° F	1 5/8"
50° F	1 9/16"
65° F	1 1/2"
80° F	1 7/16"
95° F	1 3/8"

Compression Seal Joint Design Example (1) (con't)

Note on Plans:

1. Minimum width "T" for seal installation = 1 1/2" (Approx. 65° F or less).
2. The compression seal has been designed for a total factored movement of 0.82". This design includes movement due to temperature, skew, shrinkage and minimum installation. The Contractor shall use compression seal *WA-250 by Watson Bowman Acme* or *CV-2502 by D.S. Brown Co.*
3. Values in the Temperature Adjustment Table are for adjusting the expansion joint assembly immediately prior to pouring the concrete blockouts.

Compression Seal Joint Design Example (2)

Design Example (2)

- **Precast prestressed girder**
- Total expansion length = 135'
- Skew angle = 15°
- Expansion joint at one abutment
- Value of Constants:

$\theta = 15°$
$\alpha = 0.0000060$ in./in./°F
$\beta = 0.0002$
$\mu = 0.5$
$L_{trib} = 135'$
$\Delta T = 80°$ F (0° F to $^{+}80°$ F)
$T_{install} = 65°$ F
$\gamma_{TU} = 1.2$

A. Movement Calculations

$M_t = (\alpha)(L_{trib})(\Delta T)(\gamma_{TU})$
$= (0.0000060$ in./in./°F$)(135')(80°$ F$)(1.2)(\ 12"/')$
$= 0.93"$

$M_{t\ normal} = M_t \cos\theta$
$= (0.93")\cos 15°$
$= 0.90"$

$M_s = (\beta)(\mu)(L_{trib})$
$= (0.0002)(0.5)(135')(12"/')$
$= 0.16"$

$M_{s\ normal} = M_s \cos\theta$
$= (0.16")\cos 15°$
$= 0.16"$

$M_p = (M_t + M_s)\sin\theta$
$= (0.93" + 0.16")\sin 15°$
$= 0.28"$

$\Delta T_{ratio\ min} = (T_{install} - T_{min})/(\Delta T)$
$= (65°\text{ F} - 0°\text{F})/(80°\text{ F})$
$= 0.8125$

$\Delta T_{ratio\ max} = (T_{max} - T_{install})/(\Delta T)$
$= (80°\text{ F} - 65°\text{ F})/(80°\text{ F})$
$= 0.1875$

$M_n = (M_t + M_s)\cos\theta$
$= (0.93" + 0.16")\cos 15°$
$= 1.05"$

$M_{t\ longitudinal} = (M_t + M_s) = 1.09" \leq 2"$ (max. movement for compression seal)

$\theta = 15° \leq 30°$

$\Rightarrow$ **OK**

Compression Seal Joint Design Example (2) (con't)

B. Selection of Seal Width (largest W value)

1. $W \geq M_n / 0.45 = 1.05"/0.45 =$ 2.33"
2. $W \geq M_p / 0.20 = 0.28"/0.20 =$ 1.40"

governs → 3. $W \geq 4\ [(\Delta T_{ratio\ min} \cdot M_{t\ normal}) + M_{s\ normal}]$
$\geq 4\ [(0.8125 \cdot 0.90") + 0.16"] = 3.56"$

$\Rightarrow$ Try a 4" seal

Joint Type	Joint Opening		Minimum Install	Nominal Width
	Minimum	Max		
WA-400	1.625"	3.40"	2.5"	4.0"
CV-4000	1.750"	3.40"	2.4"	4.0"

C. Check Joint Opening for Install, Max. and Min. Temperatures

1. Install Temp. (65° F):

$A_{install}$ = manufacturer's min. install width
= 2.5"

$\Rightarrow$ Set $A_{install} = 2.5"$

2. Min. Temp. :

$A_{max} = A_{install} + [(\Delta T_{ratio\ min} \cdot M_{t\ normal}) + M_{s\ normal}] \leq$ manufacturer's maximum opening

$A_{max} = 2.5" + [(0.8125 \cdot 0.90") + 0.16"]$
$= 3.39" < 3.40"$ **O.K.**

3. Max. Temp. :

$A_{min} = A_{install} - (\Delta T_{ratio\ max} \cdot M_{t\ normal}) \geq$ manufacturer's min. opening

$A_{min} = 2.5" - (0.1875 \cdot 0.90")$
$= 2.33" > 1.625"$ (WA-400) **O.K.**
$> 1.75"$ (CV-4000) **O.K.**

4. Min. Opening between *stop bars*:

$A_{min\ stop\ bars} = A_{min} - (2 \cdot 0.5"$ stop bar width$) > 0"$
$= 2.33" - (2 \cdot 0.5") = 1.33"$ **O.K.** (stop bars will not close together)

5. $A_{max\ longitudinal} \leq 4"$ (*AASHTO 14.5.6.6)*

$A_{max\ longitudinal} = A_{max}/\cos\theta$
$A_{max\ longitudinal} = 3.39/\cos 15° = 3.51" \leq 4"$ **O.K.**

$\Rightarrow$ **Use: 4" compression seal (WA-400 or CV-4000)**

Compression Seal Joint Design Example (2) (con't)

D. Calculate Temperature Adjustment Table

$\Rightarrow$ Note: Calculate $M_{t\ normal}$ *without* load factor, γ_{TU}

$M_{15°\ normal}$ $= (\alpha)(L_{trib})(15°)(12"/')\cos 15°$
$= (0.0000060\ in./in./°F)(135')(15°\ F)(12"/')\cos 15°$
$= 0.141"$

"T" at $20°\ F = A_{install} + (3)(M_{15°\ normal}) = 2.92"$
$35°\ F = A_{install} + (2)(M_{15°\ normal}) = 2.78"$
$50°\ F = A_{install} + (1)(M_{15°\ normal}) = 2.64"$
$65°\ F = A_{install} = 2.5"$
$80°\ F = A_{install} - (1)(M_{15°\ normal}) = 2.36"$
$95°\ F = A_{install} - (2)(M_{15°\ normal}) = 2.22"$

Temperature Adjustment Table	
Temperature	**"T"**
20° F	2 15/16"
35° F	2 3/4"
50° F	2 5/8"
65° F	2 1/2"
80° F	2 3/8"
95° F	2 1/4"

Note on Plans:

1. Minimum width for seal installation "T" = 2 1/2" (Approx. 65° F or less).
2. The compression seal has been designed for a total factored movement of 1.09". This design includes movement due to temperature, skew, shrinkage and minimum installation. The Contractor shall use compression seal *WA-400 by Watson Bowman Acme* or *CV-4000 by D.S. Brown Co.*
3. Values in the Temperature Adjustment Table are for adjusting the expansion joint assembly immediately prior to pouring the concrete blockouts.

Page intentionally left blank.

Strip Seal Expansion Joint Limitations

A strip seal joint may be used with the following limitations (See Appendix 7.4-B4 for a strip seal joint detail. See p. 7.4-A4-2 for design notations and p 7.4-A4-3 & 6 for design examples):

- Total movement of expansion joint measured along center line of bridge (expansion and contraction) ≤ 4.0"
- Use 4" seal only (Two manufacturers are required per FHWA. At time of publication, D.S. Brown only makes a 4" seal).
- No splices of the seal shall be allowed.
- The complete full width units shall be shipped to the project site.
- Maximum roadway surface gap (measured along center line of bridge) ≤ 4.0" *(AASHTO 14.5.3.2).*
- Minimum joint opening at installation of seal shall not be less than 1.5" normal to joint for Watson Bowman Acme. Minimum joint opening at installation of seal shall not be less than 1.75" normal to joint for D.S. Brown Co. (per email from D.S. Brown representative)
  - ⇒ For starters, check that the joint opening is at least 1.75" for 65°F (typical construction installation temperature). If a larger seal size is required, then try 1.75" installation joint opening at 60°F.
- The minimum joint opening at total temperature expansion (measured from the inside of the steel edge members that holds the gland) shall not be less than 0.5" or the manufacturer's minimum opening (whichever is greater).
- Bridges on horizontal curve or skews over 30° must accommodate "racking" or transverse movements per NHDOT:
  - ♦ 30° < skew ≤ 45°:
    - ⇒ Limit "racking" movement to 60% of seals rated capacity (total movement parallel to the joint ÷ 0.60)
  - ♦ Skews > 45°:
    - ⇒ Limit "racking" movement to 50% of seals rated capacity (total movement parallel to joint ÷ 0.50)
- For skews between 32° and 42° left ahead (either direction on Interstate), communication shall be made with the Bridge Design Chief, Bureau of Bridge Maintenance and the District Engineer on whether a plow protection plate should be placed on the expansion joint. The use of a plow plate will be decided on a project to project basis. (See Appendix 7.4-B8 for the Plow Protection Plate Sample Plan).
- Concrete block-outs are required for the installation of a strip seal expansion joint.
- Anchorage of the strip seal expansion joint to the backwall and deck, between the curb lines, shall be made using loop rebar and shall be spaced at 1'-0" maximum. Brush curb and sidewalk anchorage shall be made of stud anchors and shall be spaced at 1'-6" maximum. The anchorage reinforcement shall extend into the backwall or curb reinforcement cage for proper anchorage.

Expansion Joint Design Notations

$M_{t(unfactored)}$ = Movement due to temperature (inches)
= $\alpha \cdot L_{trib} \cdot \Delta T \cdot$ (12 in./1ft.)

ΔT = bridge superstructure average temperature range as a function of bridge type and location
= 80° F (0° F to $^{+}$80° F) for concrete bridges
= 125° F ($^{-}$20° F to $^{+}$105° F) for steel bridges

L_{trib} = tributary length of the structure subject to expansion or contraction

α = Coefficient of thermal expansion
= 0.0000060 in./in./°F for concrete
= 0.0000065 in./in./°F for steel

M_s = Movement due to shrinkage after construction (inches) (concrete beams)
= $\beta \cdot \mu \cdot L_{trib}$

β = shrinkage coefficient for reinforced concrete, 0.0002

μ = factor accounting for restraining effect imposed by superstructure elements installed before the concrete slab is cast
= 0.5 for precast prestressed concrete girders
= 0.8 for concrete box girders and T-beams
= 1.0 for concrete flat slabs

M_p = Movement parallel to joint (inches)

M_n = Movement normal to joint (inches)

γ_{TU} = Load factor for force effect due to uniform temperature, 1.2

θ = Skew angle

"T" = Joint opening normal to joint for the installation chart (inches)

A = Joint opening normal to joint

W = Nominal uncompressed width of expansion seal (inches)

W_{min} = Minimum expansion width (inches)

W_{max} = Maximum expansion width (inches)

$W_{install}$ = Expansion width at installation (inches)

T_{min} = Minimum superstructure temperature
= (0° for concrete bridges, $^{-}$20° F for steel bridges)

T_{max} = Maximum superstructure temperature
= ($^{+}$80° F for concrete bridges, $^{+}$105° F for steel bridges)

$T_{install}$ = Minimum installation superstructure temperature
= $^{+}$65° F (all bridges)

Strip Seal Joint Design Example (1)

Design Procedure

A. Movement Calculations

$M_t = (\alpha)(L_{trib})\ (\Delta T)(\gamma_{TU})(12"/')$

$M_s = (\beta)(\mu)(L_{trib})(12"/')$ (= 0 for steel bridges)

$M_{t\ longitudinal} = (M_t + M_s)$

$M_{t\ normal} = M_t \cos\theta$

$M_{s\ normal} = M_s \cos\theta$ (= 0 for steel bridges)

$M_p = (M_t + M_s)\sin\theta$

$\Delta T_{ratio\ min} = (T_{install} - T_{min})/(\Delta T)$

$\Delta T_{ratio\ max} = (T_{max} - T_{install})/(\Delta T)$

B. Select seal width from largest W or A value:

1. Install Temp. (65° F):

$A_{install}$ = manufacturer's min. install width

$\Rightarrow$ Set $A_{install}$

2. $W \geq M_{t\ longitudinal}$

$W \geq A_{max} = A_{install} + [(\Delta T_{ratio\ min} \cdot M_{t\ normal}) + M_{s\ normal}] \leq$ manufacturer's maximum opening

$W \geq M_p \div$ % of seals rated capacity due to racking

3. Check Max. Temp.:

Min. construction gap width A = 0.5" (NHDOT)

$A_{min} = A_{install} - (\Delta T_{ratio\ max} \cdot M_{t\ normal}) \geq$ manufacturer's min. opening $\geq$ 0.5" (NHDOT)

4. Check Max. Opening:

$A_{max\ longitudinal} \leq 4"$ (*AASHTO 14.5.3.2)*

$A_{max\ longitudinal} = A_{max} \div \cos\theta$

$\Rightarrow$ Confirm two different manufacturer seals (same size) meet all requirements.

C. Calculate Temperature Adjustment Table

Calculate $M_{t\ normal}$ *without* load factor, γ_{TU}

Design Example (1)

- **Steel girder**
- Total expansion length = 275'
- Skew angle = 0°
- Expansion joint at one abutment
- Value of Constants:

$\theta = 0°$	ΔT=125° F (-20° F to $^{+}$105° F)
α = 0.0000065 in./in./°F	L_{trib} = 275'
$T_{install}$ = 65° F	γ_{TU} = 1.2

Strip Seal Joint Design Example (1) (con't)

A. Movement Calculations

$M_t = (\alpha)(L_{trib})(\Delta T)(\gamma_{TU})$
$= (0.0000065 \text{ in./in./°F})(275')(125° \text{ F})(1.2)(12''/')$
$= 3.22''$

$M_s = 0$

$M_{t\ normal} = M_t \cos\theta$
$= (3.22'')\cos 0°$
$= 3.22''$

$M_{t\ longitudinal} = (M_t + M_s) = 3.22'' \leq 4''$ (max. movement for strip seal)

$\Rightarrow$ **OK to use strip seal**

$\Delta T_{ratio\ min} = (T_{install} - T_{min})/(\Delta T)$
$= [65° \text{ F} - (-20° \text{ F})] / (125° \text{ F})$
$= 0.680$

$\Delta T_{ratio\ max} = (T_{max} - T_{install})/(\Delta T)$
$= (105° \text{ F} - 65° \text{ F}) / (125° \text{ F})$
$= 0.320$

B. Selection of Seal Width

Joint Type	Movement		Minimum Install	Nominal Width
	Minimum	Max		
SE-400	0"	4"	1.5"	4.0"
A2R-400	0.5"	4.5"	1.75"	4.0"

1. Install Temp. (65° F):

$A_{install}$ = manufacturer's min. install width
$A_{install} \geq 1.5''$ (SE-400)
$\geq 1.75''$ (A2R-400)

$\Rightarrow$ Set $A_{install} = 1.75''$

2. Min. Temp. :

$A_{max} = A_{install} + [(\Delta T_{ratio\ min} \cdot M_{t\ normal}) + M_{s\ normal}] \leq$ manufacturer's maximum opening

$= 1.75'' + [(0.680 \cdot 3.22'') + 0'']$
$= 3.94'' \leq 4''$ (SE-400) **O.K.**
$\leq 4.5''$ (A2R-400) **O.K.**

Strip Seal Joint Design Example (1) (con't)

3. Max. Temp. :

$A_{min} = A_{install} - [(\Delta T_{ratio\ max} \cdot M_{t\ normal})]$ ≥ manufacturer's min. opening
≥ 0.5" (NHDOT)

= 1.75" - [(0.320 · 3.22")]
= 0.71" ≥ 0" (SE-400) **O.K.**
≥ 0.5" (A2R-400) **O.K.**
≥ 0.5" (NHDOT) **O.K.**

4. Check Max. Opening:

$A_{max\ longitudinal} \leq 4$" (*AASHTO 14.5.3.2)*
$A_{max\ longitudinal} = A_{max} \div \cos\theta = 3.94" \div \cos 0° = 3.94" \leq 4"$ **O.K.**

⇒ **Use: 4" strip seal (SE-400 or A2R-400)**

C. Calculate Temperature Adjustment Table

Calculate $M_{t\ normal}$ *without* load factor, γ_{TU}

$M_{15°\ normal}$ $= (\alpha)(L_{trib})(15°)\cos\theta$
$= (0.0000065\ in./in./°F)(275' \cdot 12"/')(15°\ F)\ \cos 0°$
$= 0.322"$

"T" at 20° F = $A_{install}$ + (3)($M_{15°\ normal}$) = 2.72"
35° F = $A_{install}$ + (2)($M_{15°\ normal}$) = 2.39"
50° F = $A_{install}$ + (1)($M_{15°\ normal}$) = 2.07"
65° F = $A_{install}$ = 1.75"
80° F = $A_{install}$ - (1)($M_{15°\ normal}$) = 1.43"
95° F = $A_{install}$ - (2)($M_{15°\ normal}$) = 1.11"

Temperature Adjustment Table	
Temperature	**"T"**
20° F	2 3/4"
35° F	2 3/8"
50° F	2 1/16"
65° F	1 3/4"
80° F	1 7/16"
95° F	1 1/8"

Notes on Plan:

1. Minimum width for seal installation "T" = 1 3/4" (Approx. 65° F or less).
2. The strip seal has been designed for a total factored movement of 3.22". This design includes movement due to temperature, skew, and minimum installation. The Contractor shall use strip seal *SE-400 by Watson Bowman Acme* or *A2R-400 by D.S. Brown Co.*
3. Values in the Temperature Adjustment Table are for adjusting the expansion joint assembly immediately prior to pouring the concrete blockouts.

Strip Seal Joint Design Example (2)

Design Example (2)

- **Steel girder**
- Total expansion length = 250'
- Skew angle = 45°
- Expansion joint at one abutment
- Value of Constants:

$\theta = 45°$
$\alpha = 0.0000065$ in./in./°F
$L_{trib} = 250'$
$\Delta T = 125°$ F (-20° F to $^{+}105°$ F)
$T_{install} = 65°$ F
$\gamma_{TU} = 1.2$

A. Movement Calculations

$M_t = (\alpha)(L_{trib})(\Delta T)(\gamma_{TU})(12"/')$
$= (0.0000065$ in./in./°F$)(250')(125°$ F$)(1.2)(12"/')$
$= 2.93"$

$M_s = 0$

$M_{t\ normal} = M_t \cos\theta$
$= (2.93")\cos 45°$
$= 2.07"$

$M_p = (M_t + M_s)\sin\theta$
$= (2.93" + 0")\sin 45°$
$= 2.07"$

$M_{t\ longitudinal} = (M_t + M_s) = 2.93" \leq 4"$ (max. movement for strip seal)

$\Rightarrow$ **OK to use strip seal**

$\Delta T_{ratio\ min} = (T_{install} - T_{min})/(\Delta T)$
$= [65°$ F $- (-20°$ F$)]\ /(125°$ F$)$
$= 0.680$

$\Delta T_{ratio\ max} = (T_{max} - T_{install})/(\Delta T)$
$= (105°$ F $- 65°$ F$)\ /(125°$ F$)$
$= 0.320$

Strip Seal Joint Design Example (2) (con't)

B. Selection of Seal Width (largest W or A value)

- Install Temp. (65° F):

$A_{install} \geq$ manufacturer's min. install width
≥ 1.5" (SE-400)
≥ 1.75" (A2R-400)

$\Rightarrow$ Set $A_{install} = 1.75$"

Joint Type	Movement		Minimum Install	Nominal Width
	Minimum	Max		
SE-400	0"	4"	1.5"	4.0"
A2R-400	0.5"	4.5"	1.75"	4.0"

- 30° < skew ≤ 45°:
  $\Rightarrow$ Limit "racking" movement to 60% of seals rated capacity (total movement parallel to the joint ÷ 0.60)

- Select seal width from largest W or A value:

1. $W \geq M_{t\ longitudinal}$
   ≥ 2.93"

2. $A_{max} = A_{install} + [(\Delta T_{ratio\ min} \cdot M_{t\ normal}) + M_{s\ normal}] \leq$ manufacturer's maximum opening
   $= 1.75" + [(0.680 \cdot 2.07") + 0"]$
   $= 3.16" \leq 4"$ (SE-400) **O.K.**
   $\leq 4.5"$ (A2R-400) **O.K.**

governs → 3. $W \geq M_p \div 0.6$
$\geq 2.07" \div 0.6$
$\geq 3.45"$

- Check Max. Temp:
  $A_{min} = A_{install} - [(\Delta T_{ratio\ max} \cdot M_{t\ normal})] \geq$ manufacturer's min. opening ≥ 0.5" (NHDOT)
  $= 1.75" - [(0.320 \cdot 2.07")]$
  $= 1.08" \geq 0"$ (SE-400) **O.K.**
  $\geq 0.5"$ (A2R-400) **O.K.**
  $\geq 0.5"$ (NHDOT) **O.K.**

- Check Max. Opening:
  $A_{max\ longitudinal} \leq 4"$ (*AASHTO 14.5.3.2)*
  $A_{max\ longitudinal} = A_{max} \div \cos\theta = 3.16" \div \cos 45° = 4.47" > 4"$ **N.G.**

$\Rightarrow$ **Need to use a finger expansion joint.**

Page intentionally left blank.

Finger Expansion Joint Limitations

A finger expansion joint may be used with the following limitations (See Appendix 7.4-B5 for a finger joint sample plan as a guide) (See p 7.4-A5-3 for design notations and p. 7.4-A5-4 for design example):

- Typically used for total movement of expansion joint > 4" measured along the center line of the bridge (expansion and contraction). May be required if a strip seal cannot be used.
- The finger joint plates requirements:
  - ⇒ Minimum joint opening (at max. design temperature) in the longitudinal direction between fingers shall be 1" for steel beams. For concrete beams the minimum joint opening may be less to account for creep and shrinkage. *(AASHTO 14.5.3.2)*
  - ⇒ Maximum joint opening (at min. design temperature) in the transverse direction between fingers shall not exceed 2" when the maximum longitudinal opening in the direction of traffic exceeds 8". *(AASHTO 14.5.3.2)*
  - ⇒ Maximum joint opening (at min. design temperature) in the transverse direction between fingers shall not exceed 3" when the maximum longitudinal opening in the direction of traffic is 8" or less. *(AASHTO 14.5.3.2)*
  - ⇒ Minimum finger overlap shall be 2" in the longitudinal direction at maximum joint opening (at minimum design temperature).
  - ⇒ Parallel to the profile grade, follow the cross-slope
  - ⇒ Set 1/8" lower than the proposed finished roadway grade.
  - ⇒ Minimum 2 ¼" thickness.
  - ⇒ Minimum 2" center-to-center of finger.
  - ⇒ No outside vertical curb plate cover on exterior (Need to keep exterior joint opening for maintenance.) Still use vertical plate at curb line.
  - ⇒ As a minimum, cuts (breaks) in plate should be at the downspouts, crown line and painted travel lane lines.
- Drain trough design requirements:
  - ⇒ 3-ply performed fabric material conforming to NHDOT Standard Specification for Road & Bridge Construction, Section 561.
  - ⇒ Slope 1" per foot *(AASHTO 14.5.6.3),* ½" per foot min. *(Br. Maintenance)*
  - ⇒ Start with a minimum drain trough depth of 4" (6" preferred).
  - ⇒ No more than 50 ft. without a downspout.
  - ⇒ No kinks.
  - ⇒ The fabric shall be cut during shop pre-assembly from one piece.
  - ⇒ For phase construction, the fabric shall be shall be cut during shop pre-assembly and supplied in lengths with 1'-0" overlap at crown line and phase construction joints.

Finger Joint Limitations (con't)

⇒ Design in sections to provide constructability and maintenance access. Provide cuts in the trough for hoppers and at the profile grade line with 1'-0" overlap.

- Downspout design requirements:
  - ⇒ As many downspouts as possible
  - ⇒ Size 6" x 6" minimum, 8" x 8" preferred by Bridge Maintenance
  - ⇒ Avoid sharp bends
  - ⇒ Install cleanouts at angle changes
  - ⇒ Do not encase in concrete
- The Designer shall determine and specify the joint settings as noted on the temperature adjustment table.
- If bicycle traffic will be crossing the finger joint, the Bridge Design Chief shall be consulted on what type of protection to provide.

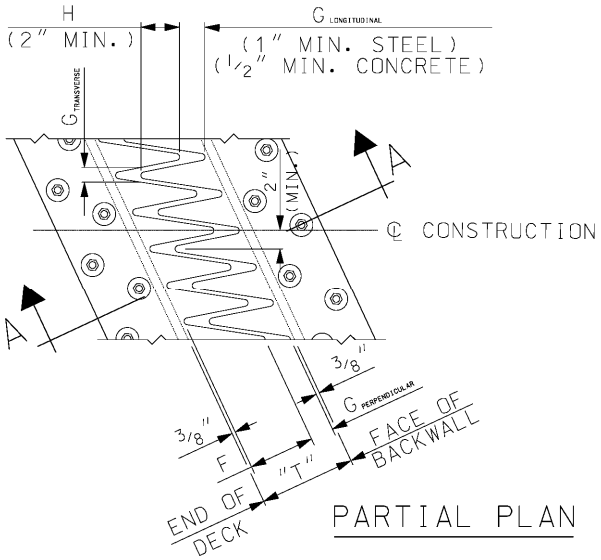

PARTIAL PLAN

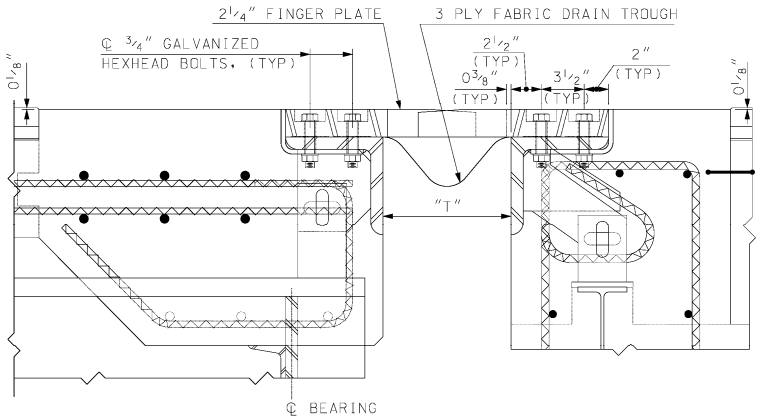

SECTION A–A

Expansion Joint Design Notations

$M_{t(unfactored)}$ = Movement due to temperature (inches)
= $\alpha \cdot L_{trib} \cdot \Delta T \cdot (12 \text{ in./1ft.})$

- ΔT = bridge superstructure average temperature range as a function of bridge type and location
  - = 80° F (0° F to $^{+}$80° F) for concrete bridges
  - = 125° F ($^{-}$20° F to $^{+}$105° F) for steel bridges
- L_{trib} = tributary length of the structure subject to expansion or contraction
- α = Coefficient of thermal expansion
  - = 0.0000060 in./in./°F for concrete
  - = 0.0000065 in./in./°F for steel

M_s = Movement due to shrinkage after construction (inches) (concrete beams)
= $\beta \cdot \mu \cdot L_{trib}$

- β = shrinkage coefficient for reinforced concrete, 0.0002
- μ = factor accounting for restraining effect imposed by superstructure elements installed before the concrete slab is cast
  - = 0.5 for precast prestressed concrete girders
  - = 0.8 for concrete box girders and T-beams
  - = 1.0 for concrete flat slabs

M_p = Movement parallel to joint (inches)

M_n = Movement normal to joint (inches)

γ_{TU} = Load factor for force effect due to uniform temperature, 1.2

θ = Skew angle

"T" = Joint opening normal to joint for the installation chart (inches)

F = Finger length

$G_{longitudinal}$ = Longitudinal opening between fingers

H_{min} = Minimum finger overlap in the longitudinal direction

H_{max} = Maximum finger overlap in the longitudinal direction

T_{min} = Minimum superstructure temperature
= (0° for concrete bridges, $^{-}$20° F for steel bridges)

T_{max} = Maximum superstructure temperature
= ($^{+}$80° F for concrete bridges, $^{+}$105° F for steel bridges)

Finger Joint Design Example

I. Design Procedure

A. Movement Calculations

$M_t = (\alpha)(L_{trib})(\Delta T)(\gamma_{TU})(12"/')$

$M_s = (\beta)(\mu)(L_{trib})(12"/')$ (= 0 for steel bridges)

$M_{t\ longitudinal} = (M_t + M_s)$

$G_{longitudinal}$ = Longitudinal opening between fingers
= 1" min. for steel beams
= ½" min. for concrete beams

$G_{transverse} < 3"$, when $G_{longitudinal} \leq 8"$ (*AASHTO 14.5.3.2)*
$< 2"$, when $G_{longitudinal} > 8"$ (*AASHTO 14.5.3.2)*

$H_{min} = 2"$ (minimum finger overlap in the longitudinal direction, NHDOT)

F = Finger length

B. Check Joint Opening "T" for Maximum Temperature

$\Rightarrow$ Min. longitudinal joint opening between fingers ($G_{longitudinal}$) at max. design temperature

"T"$_{min}$ = 3/8" space + $G_{perpendicular}$ + F + 3/8" space

$\Rightarrow$ Set "T"$_{min}$

C. Check Finger Overlap Length (H) for Max. and Min. Temperatures

1. Max. Temp. :

$H_{max} = [F/\cos\theta] - G_{longitudinal\ MIN}$

2. Min. Temp.:

$H_{min} = H_{max} - M_{t\ longitudinal} \geq 2"$

D. Calculate Temperature Adjustment Table

Calculate $M_{t\ normal}$ *without* load factor, γ_{TU}

Finger Joint Design Example (con't)

II. Design Example

- **Steel girder**
- Total expansion length = 360'
- Skew angle = 25°
- Expansion joint at one abutment
- Value of Constants:

  $\theta = 25°$

  $\alpha = 0.0000065$ in./in./°F

  $L_{trib} = 360'$

  $\Delta T = 125°$ F (-20° F to $^{+}105°$ F)

  $\gamma_{TU} = 1.2$

  F = 7.25" (measured normal to the joint)

  $G_{longitudinal\ MIN} = 1"$

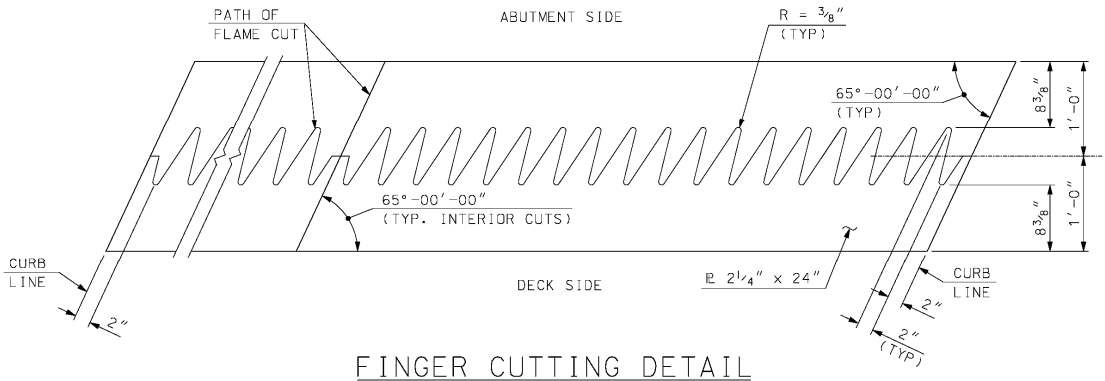

FINGER CUTTING DETAIL

A. Movement Calculations

$M_t = (\alpha)(L_{trib})(\Delta T)(\gamma_{TU})(12"/')$

$= (0.0000065\ in./in./°F)(360')(125°\ F)(1.2)(12"/')$

$= 4.21"$

$M_s = 0$

$M_{t\ longitudinal} = (M_t + M_s) = 4.21"$

Finger Joint Design Example (con't)

B. Check Joint Opening "T" for Maximum Temperature

$\Rightarrow$ Min. longitudinal joint opening between fingers ($G_{longitudinal}$) at max. design temperature = 105° F

$$\text{"T"}_{min} = 3/8\text{" space} + G_{longitudinal\ MIN}(\cos\theta) + F + 3/8\text{" space}$$
$$= 3/8\text{"} + 1\text{"}(\cos 25°) + 7.25\text{"} + 3/8\text{"}$$
$$= 8.91\text{"}$$

$\Rightarrow$ Set "T"$_{min}$ = 9"

$$G_{longitudinal\ MIN\ PROVIDED} = (\text{"T"}_{min} - 2(space) - F) \div \cos\theta$$
$$= (9 - 2(3/8\text{"}) - 7.25) \div \cos 25°$$
$$= 1.103\text{"} > 1\text{"}\ \textbf{O.K}$$

C. Check Finger Overlap Length (H) for Max. and Min. Temperatures

1. Max. Temp. (105° F):

$$H_{max} = [F \div \cos\theta] - G_{longitudinal\ MIN\ PROVIDED}$$
$$= [7.25\text{"} \div \cos(25°)] - 1.103\text{"}$$
$$= 6.90\text{"}$$

2. Min. Temp. (-20° F):

$$H_{min} = H_{max} - M_{t\ longitudinal} \geq 2\text{"}$$
$$= 6.90\text{"} - 4.21\text{"} = 2.69\text{"} \geq 2\text{"}\ \textbf{O.K.}$$

D. Calculate Temperature Adjustment Table

Calculate $M_{t\ normal}$ *without* load factor, γ_{TU}

$$M_{15°\ normal} = (\alpha)(L_{trib})(15°)(12\text{"/'})\cos\theta$$
$$= (0.0000065\ \text{in./in./°F})(360\text{'})(15°\ F)(12\text{"/'})\cos(25°)$$
$$= 0.382\text{"}$$

"T" at -20° F = "T"$_{min}$ + (8.33)($M_{15°\ normal}$) = 12.17"
0° F = "T"$_{min}$ + (7)($M_{15°\ normal}$) = 11.67"
15° F = "T"$_{min}$ + (6)($M_{15°\ normal}$) = 11.29"
30° F = "T"$_{min}$ + (5)($M_{15°\ normal}$) = 10.91"
45° F = "T"$_{min}$ + (4)($M_{15°\ normal}$) = 10.5"
60° F = "T"$_{min}$ + (3)($M_{15°\ normal}$) = 10.15"
75° F = "T"$_{min}$ + (2)($M_{15°\ normal}$) = 9.76"
90° F = "T"$_{min}$ + (1)($M_{15°\ normal}$) = 9.38"
105° F = "T"$_{min}$ = 9"

Temperature Adjustment Table			
Temperature	**"T"**	**Temperature**	**"T"**
15° F	11 1/4"	60° F	10 1/8"
30° F	10 15/16""	75° F	9 3/4"
45° F	10 1/2"	90° F	9 3/8"

Modular Expansion Joint Limitations

A modular expansion joint may be used with the following limitations (See Appendix 7.4-B7 for a modular joint detail. See p 7.4-A6-2 for design notations and p. 7.4-A6-3 for design example):

- > 4" total movement of expansion joint measured along the center line of the bridge (expansion and contraction).
- 32° > Skew of joint > 42° (outside typical snowplow angle).
- The use of a modular expansion joint shall be approved by the Design Chief.
- No splices of the seal shall be allowed.
- The complete full width units shall be shipped to the project site.
- Maximum movement of 3" per each seal element *(AASHTO 14.5.3.2-2).*
- The minimum joint opening at total temperature expansion (measured from the inside of the steel edge members that holds the gland) shall not be less than 0.5".
- The next size joint may need to be considered to allow 1" to 2" extra movement for construction discrepancies.
- Concrete block-outs are required for the installation of the modular joint.
- Anchorage of the modular joint to the backwall and deck, between the curb lines, shall be made using loop rebar and shall be spaced at 1'-0" maximum. Brush curb and sidewalk anchorage shall be made of stud anchors and shall be spaced at 1'-6" maximum. The anchorage reinforcement shall extend into the backwall or curb reinforcement cage for proper anchorage.
- Notes shall be placed on the plans stating the following:
    1. The modular bridge joint system shall have a range of movement of XX inches. The Contractor shall use modular bridge joint system *STM series by Watson Bowman* Acme or *D series by D.S. Brown.* This design includes movement due to temperature, skew, and minimum installation.

Expansion Joint Design Notations

$M_{t(unfactored)}$ = Movement due to temperature (inches)
= $\alpha \cdot L_{trib} \cdot \Delta T \cdot$ (12 in./1ft.)

ΔT = bridge superstructure average temperature range as a function of bridge type and location
= 80° F (0° F to $^{+}$80° F) for concrete bridges
= 125° F ($^{-}$20° F to $^{+}$105° F) for steel bridges

L_{trib} = tributary length of the structure subject to expansion or contraction

α = Coefficient of thermal expansion
= 0.0000060 in./in./°F for concrete
= 0.0000065 in./in./°F for steel

M_s = Movement due to shrinkage after construction (inches) (concrete beams)
= $\beta \cdot \mu \cdot L_{trib}$

β = shrinkage coefficient for reinforced concrete, 0.0002

μ = factor accounting for restraining effect imposed by superstructure elements installed before the concrete slab is cast
= 0.5 for precast prestressed concrete girders
= 0.8 for concrete box girders and T-beams
= 1.0 for concrete flat slabs

M_p = Movement parallel to joint (inches)

M_n = Movement normal to joint (inches)

γ_{TU} = Load factor for force effect due to uniform temperature, 1.2

θ = Skew angle

"T" = Joint opening normal to joint for the installation chart (inches)

A = Joint opening normal to joint

W = Nominal uncompressed width of expansion seal (inches)

W_{min} = Minimum expansion gap width (inches)

W_{max} = Maximum expansion gap width (inches)

$W_{install}$ = Expansion gap width at installation (inches)

T_{min} = Minimum superstructure temperature
= (0° for concrete bridges, $^{-}$20° F for steel bridges)

T_{max} = Maximum superstructure temperature
= ($^{+}$80° F for concrete bridges, $^{+}$105° F for steel bridges)

$T_{install}$ = Minimum installation superstructure temperature
= $^{+}$65° F (all bridges)

Modular Bridge Joint System Design Example

I. Design Procedure

A. Movement Calculations

$M_t = (\alpha)(L_{trib})\ (\Delta T)(\gamma_{TU})(12"/')$

$M_s = (\beta)(\mu)(L_{trib})(12"/')$ (= 0 for steel bridges)

$M_{t\ longitudinal} = (M_t + M_s)$

$M_{t\ normal} = M_t \cos\theta$

$M_p = (M_t + M_s)\sin\theta$

$\Delta T_{ratio\ min} = (T_{install}-T_{min})/(\Delta T)$

$\Delta T_{ratio\ max} = (T_{max}-T_{install})/(\Delta T)$

$MR = M_{n\ open} + M_{n\ close}$

B. Selection of Joint Size

The total movement range, MR should be a multiple of 3"

$\Rightarrow$ Confirm two different manufacturer MBJS can be used.

C. Calculate Installation Gaps ("W" or "A")

Installation gap is the distance measured face to face of steel angles (L 6x6x3/4)

- Calculate *without* load factor, γ_{TU}
- Minimum seal joint opening = 0.5" (NHDOT)

D. Calculate Center Beam Spacing

Modular Bridge Joint System Design Example (con't)

II. Design Example

- **Steel girder**
- Total expansion length = 1640'
- Skew angle = 15°
- Expansion joint at both abutments
- Point of no movement for temperature is at the center of the bridge
- Value of Constants:

$\theta = 15°$
$\alpha = 0.0000065$ in./in./°F
$L_{trib} = 1640' \div 2 = 820'$
$\Delta T = 125°$ F (-20° F to $^{+}105°$ F)
$T_{install} = 65°$ F
$\gamma_{TU} = 1.2$

A. Movement Calculations

$M_t = (\alpha)(L_{trib})(\Delta T)(\gamma_{TU})(12"/')$
$= (0.0000065$ in./in./°F$)(820')(125°$ F$)(1.2)(12"/')$
$= 9.59"$

$M_{t\ normal} = M_t \cos\theta$
$= (9.59")\cos 15°$
$= 9.26"$

$M_s = 0$

$M_p = (M_t + M_s)\sin\theta$
$= (9.59" + 0")\sin 15°$
$= 2.48"$

$M_{t\ longitudinal} = (M_t + M_s) = 9.59" > 4"$

$\Rightarrow$ **OK to use modular joint**

$\Delta T_{ratio\ min} = (T_{install} - T_{min})/(\Delta T)$
$= [65°$ F $- (-20°$ F$)]\ /(125°$ F$)$
$= 0.680$

$\Delta T_{ratio\ max} = (T_{max} - T_{install})/(\Delta T)$
$= (105°$ F $- 65°$ F$)\ /(125°$ F$)$
$= 0.320$

$M_{normal\ close} = (\Delta T_{ratio\ max} \cdot M_{t\ normal})$
$= (0.320 \cdot 9.26")$
$= 2.96"$

Modular Bridge Joint System Design Example (con't)

$M_{normal\ open} = (\Delta T_{ratio\ min} \cdot M_{t\ normal}) + M_{s\ normal}$
$= (0.680 \cdot 9.26") + 0"$
$= 6.30"$

$MR = M_{normal\ close} + M_{normal\ open}$
$= 2.96" + 6.30"$
$= 9.26"$

B. Selection of Joint Size

The total movement range, MR should be a multiple of 3"

MR = 9.26"

⇒ **Use a 12" movement range joint.**

C. Calculate Installation Gaps ("W" or "A")

Installation gap is the distance measured face to face of steel angles (L 6x6x3/4)

- Calculate *without* load factor, γ_{TU}
- Minimum seal joint opening = 0.5" (NHDOT)
- Assume center beam top flange width = 2.5"
- Assume edge beam top flange width = 1.25"
- Install Temp. = 65° F

1. Number of strip seals = (12"MR ÷ 3") = 4 strip seals
2. Number of center beams = (4 strip seals – 1) = 3 center beams
3. A_{min} = (3 center beams)(2.5" top flange width) + (4 strips seals)(0.5") + (2 edge beams)(1.25")
   = 12"
4. $A_{install} = A_{min} + M_{normal\ close}$
   = 12" + 2.96"
   = 14.96" Say 15"
5. $A_{15°F} = (\alpha)(L_{trib})(15°)(12"/')\cos\theta$
   = (0.0000065 in./in./°F)(820')(15° F)(12"/') cos15°
   = 0.93"

   ⇒ Adjustment in opening for a 15° F change in temperature = 15/16"

Modular Bridge Joint System Design Example (con't)

D. Calculate Center Beam Spacing

1. Check spacing of center beams at minimum temperature.
   - Maximum gap between adjacent center beams should be limited to 3 ½"

$A_{-20°F}$ = $A_{install}$ + $M_{normal\ open}$
= 15" + 6.30"
= 21.3"

Spacing= [$A_{-20°F}$ - (3 center beams)(2.5" top flange width)] ÷ 4 strip seals
= [21.3"- (3)(2.5)] ÷ 4
= 3.45" ≤ 3.5" **O.K.**

2. Check spacing of center beams at 65° F for future seal replacement.

Spacing= [$A_{install}$ - (3 center beams)(2.5" top flange width)] ÷ 4 strip seals
= [15"- (3)(2.5)] ÷ 4
= 1.875" ≥ 1.75" (manufacturer's min. strip seal installation width)

O.K. The strip seal will be able to be placed at 65° F or lower.

⇒ If the spacing was less than 1.75", then the center beams would need to be mechanically separated in order to replace the strip seal elements. This information would need to be noted on the plans.

Note on Plans:

1. Adjustment in expansion joint assembly opening for a 15° F change in temperature immediately prior to pouring the concrete blockouts = 15/16"
2. The modular bridge joint system shall have a range of movement of 12". The Contractor shall use modular bridge joint system *STM series by Watson Bowman Acme* or *D series by D.S. Brown.* This design includes movement due to temperature, skew, and minimum installation.

EXPANSION TABLE

(*Including* **γTU**, Load factor for force effect due to uniform temperature):

STEEL: $M_t = (\Delta T)*(\alpha)*(L)*(\gamma TU)$

ΔT= 125° (-20°F to +105°F) (NHDOT Bridge Design Manual, Chap. 7, Sec. 7.4)

α = 6.5 x 10^{-6} IN/IN/°F (AASHTO 6.4.1)

γTU = 1.2 (AASHTO 3.4.1-1)

SPAN LENGTH (FT)	M_t (IN)	SPAN LENGTH (FT)	M_t (IN)	SPAN LENGTH (FT)	M_t (IN)	SPAN LENGTH (FT)	M_t (IN)
1	0.01	26	0.30	51	0.60	76	0.89
2	0.02	27	0.32	52	0.61	77	0.90
3	0.04	28	0.33	53	0.62	78	0.91
4	0.05	29	0.34	54	0.63	79	0.92
5	0.06	30	0.35	55	0.64	80	0.94
6	0.07	31	0.36	56	0.66	81	0.95
7	0.08	32	0.37	57	0.67	82	0.96
8	0.09	33	0.39	58	0.68	83	0.97
9	0.11	34	0.40	59	0.69	84	0.98
10	0.12	35	0.41	60	0.70	85	0.99
11	0.13	36	0.42	61	0.71	86	1.01
12	0.14	37	0.43	62	0.73	87	1.02
13	0.15	38	0.44	63	0.74	88	1.03
14	0.16	39	0.46	64	0.75	89	1.04
15	0.18	40	0.47	65	0.76	90	1.05
16	0.19	41	0.48	66	0.77	91	1.06
17	0.20	42	0.49	67	0.78	92	1.08
18	0.21	43	0.50	68	0.80	93	1.09
19	0.22	44	0.51	69	0.81	94	1.10
20	0.23	45	0.53	70	0.82	95	1.11
21	0.25	46	0.54	71	0.83	96	1.12
22	0.26	47	0.55	72	0.84	97	1.13
23	0.27	48	0.56	73	0.85	98	1.15
24	0.28	49	0.57	74	0.87	99	1.16
25	0.29	50	0.59	75	0.88	100	1.17

SPAN LENGTH (FT)	M_t (IN)	SPAN LENGTH (FT)	M_t (IN)	SPAN LENGTH (FT)	M_t (IN)	SPAN LENGTH (FT)	M_t (IN)
101	1.18	126	1.47	151	1.77	176	2.06
102	1.19	127	1.49	152	1.78	177	2.07
103	1.21	128	1.50	153	1.79	178	2.08
104	1.22	129	1.51	154	1.80	179	2.09
105	1.23	130	1.52	155	1.81	180	2.11
106	1.24	131	1.53	156	1.83	181	2.12
107	1.25	132	1.54	157	1.84	182	2.13
108	1.26	133	1.56	158	1.85	183	2.14
109	1.28	134	1.57	159	1.86	184	2.15
110	1.29	135	1.58	160	1.87	185	2.16
111	1.30	136	1.59	161	1.88	186	2.18
112	1.31	137	1.60	162	1.90	187	2.19
113	1.32	138	1.61	163	1.91	188	2.20
114	1.33	139	1.63	164	1.92	189	2.21
115	1.35	140	1.64	165	1.93	190	2.22
116	1.36	141	1.65	166	1.94	191	2.23
117	1.37	142	1.66	167	1.95	192	2.25
118	1.38	143	1.67	168	1.97	193	2.26
119	1.39	144	1.68	169	1.98	194	2.27
120	1.40	145	1.70	170	1.99	195	2.28
121	1.42	146	1.71	171	2.00	196	2.29
122	1.43	147	1.72	172	2.01	197	2.30
123	1.44	148	1.73	173	2.02	198	2.32
124	1.45	149	1.74	174	2.04	199	2.33
125	1.46	150	1.76	175	2.05	200	2.34

EXPANSION TABLE

(*Including* **γTU**, Load factor for force effect due to uniform temperature):

STEEL: $M_t = (\Delta T)*(\alpha)*(L)*(\gamma TU)$

ΔT= 125° (-20°F to +105°F) (NHDOT Bridge Design Manual, Chap. 7, Sec. 7.4)

$\alpha = 6.5 \times 10^{-6}$ IN/IN/°F (AASHTO 6.4.1)

γTU = 1.2 (AASHTO 3.4.1-1)

SPAN LENGTH (FT)	M_t (IN)	SPAN LENGTH (FT)	M_t (IN)	SPAN LENGTH (FT)	M_t (IN)	SPAN LENGTH (FT)	M_t (IN)
201	2.35	226	2.64	251	2.94	276	3.23
202	2.36	227	2.66	252	2.95	277	3.24
203	2.38	228	2.67	253	2.96	278	3.25
204	2.39	229	2.68	254	2.97	279	3.26
205	2.40	230	2.69	255	2.98	280	3.28
206	2.41	231	2.70	256	3.00	281	3.29
207	2.42	232	2.71	257	3.01	282	3.30
208	2.43	233	2.73	258	3.02	283	3.31
209	2.45	234	2.74	259	3.03	284	3.32
210	2.46	235	2.75	260	3.04	285	3.33
211	2.47	236	2.76	261	3.05	286	3.35
212	2.48	237	2.77	262	3.07	287	3.36
213	2.49	238	2.78	263	3.08	288	3.37
214	2.50	239	2.80	264	3.09	289	3.38
215	2.52	240	2.81	265	3.10	290	3.39
216	2.53	241	2.82	266	3.11	291	3.40
217	2.54	242	2.83	267	3.12	292	3.42
218	2.55	243	2.84	268	3.14	293	3.43
219	2.56	244	2.85	269	3.15	294	3.44
220	2.57	245	2.87	270	3.16	295	3.45
221	2.59	246	2.88	271	3.17	296	3.46
222	2.60	247	2.89	272	3.18	297	3.47
223	2.61	248	2.90	273	3.19	298	3.49
224	2.62	249	2.91	274	3.21	299	3.50
225	2.63	250	2.93	275	3.22	300	3.51

SPAN LENGTH (FT)	M_t (IN)	SPAN LENGTH (FT)	M_t (IN)	SPAN LENGTH (FT)	M_t (IN)	SPAN LENGTH (FT)	M_t (IN)
301	3.52	326	3.81	351	4.11	376	4.40
302	3.53	327	3.83	352	4.12	377	4.41
303	3.55	328	3.84	353	4.13	378	4.42
304	3.56	329	3.85	354	4.14	379	4.43
305	3.57	330	3.86	355	4.15	380	4.45
306	3.58	331	3.87	356	4.17	381	4.46
307	3.59	332	3.88	357	4.18	382	4.47
308	3.60	333	3.90	358	4.19	383	4.48
309	3.62	334	3.91	359	4.20	384	4.49
310	3.63	335	3.92	360	4.21	385	4.50
311	3.64	336	3.93	361	4.22	386	4.52
312	3.65	337	3.94	362	4.24	387	4.53
313	3.66	338	3.95	363	4.25	388	4.54
314	3.67	339	3.97	364	4.26	389	4.55
315	3.69	340	3.98	365	4.27	390	4.56
316	3.70	341	3.99	366	4.28	391	4.57
317	3.71	342	4.00	367	4.29	392	4.59
318	3.72	343	4.01	368	4.31	393	4.60
319	3.73	344	4.02	369	4.32	394	4.61
320	3.74	345	4.04	370	4.33	395	4.62
321	3.76	346	4.05	371	4.34	396	4.63
322	3.77	347	4.06	372	4.35	397	4.64
323	3.78	348	4.07	373	4.36	398	4.66
324	3.79	349	4.08	374	4.38	399	4.67
325	3.80	350	4.10	375	4.39	400	4.68

EXPANSION TABLE:

(*Without* **γTU**, Load factor):

STEEL: $M_t = (\Delta T)^*(\alpha)^*(L)$

ΔT= **125° (-20°F to +105°F)** (NHDOT Bridge Design Manual, Chap. 7, Sec. 7.4)

$\alpha = 6.5 \times 10^{-6}$ **IN/IN/°F** (AASHTO 6.4.1)

SPAN LENGTH (FT)	M_t (IN)	SPAN LENGTH (FT)	M_t (IN)	SPAN LENGTH (FT)	M_t (IN)	SPAN LENGTH (FT)	M_t (IN)
1	0.01	26	0.25	51	0.50	76	0.74
2	0.02	27	0.26	52	0.51	77	0.75
3	0.03	28	0.27	53	0.52	78	0.76
4	0.04	29	0.28	54	0.53	79	0.77
5	0.05	30	0.29	55	0.54	80	0.78
6	0.06	31	0.30	56	0.55	81	0.79
7	0.07	32	0.31	57	0.56	82	0.80
8	0.08	33	0.32	58	0.57	83	0.81
9	0.09	34	0.33	59	0.58	84	0.82
10	0.10	35	0.34	60	0.59	85	0.83
11	0.11	36	0.35	61	0.59	86	0.84
12	0.12	37	0.36	62	0.60	87	0.85
13	0.13	38	0.37	63	0.61	88	0.86
14	0.14	39	0.38	64	0.62	89	0.87
15	0.15	40	0.39	65	0.63	90	0.88
16	0.16	41	0.40	66	0.64	91	0.89
17	0.17	42	0.41	67	0.65	92	0.90
18	0.18	43	0.42	68	0.66	93	0.91
19	0.19	44	0.43	69	0.67	94	0.92
20	0.20	45	0.44	70	0.68	95	0.93
21	0.20	46	0.45	71	0.69	96	0.94
22	0.21	47	0.46	72	0.70	97	0.95
23	0.22	48	0.47	73	0.71	98	0.96
24	0.23	49	0.48	74	0.72	99	0.97
25	0.24	50	0.49	75	0.73	100	0.98

SPAN LENGTH (FT)	M_t (IN)	SPAN LENGTH (FT)	M_t (IN)	SPAN LENGTH (FT)	M_t (IN)	SPAN LENGTH (FT)	M_t (IN)
101	0.98	126	1.23	151	1.47	176	1.72
102	0.99	127	1.24	152	1.48	177	1.73
103	1.00	128	1.25	153	1.49	178	1.74
104	1.01	129	1.26	154	1.50	179	1.75
105	1.02	130	1.27	155	1.51	180	1.76
106	1.03	131	1.28	156	1.52	181	1.76
107	1.04	132	1.29	157	1.53	182	1.77
108	1.05	133	1.30	158	1.54	183	1.78
109	1.06	134	1.31	159	1.55	184	1.79
110	1.07	135	1.32	160	1.56	185	1.80
111	1.08	136	1.33	161	1.57	186	1.81
112	1.09	137	1.34	162	1.58	187	1.82
113	1.10	138	1.35	163	1.59	188	1.83
114	1.11	139	1.36	164	1.60	189	1.84
115	1.12	140	1.37	165	1.61	190	1.85
116	1.13	141	1.37	166	1.62	191	1.86
117	1.14	142	1.38	167	1.63	192	1.87
118	1.15	143	1.39	168	1.64	193	1.88
119	1.16	144	1.40	169	1.65	194	1.89
120	1.17	145	1.41	170	1.66	195	1.90
121	1.18	146	1.42	171	1.67	196	1.91
122	1.19	147	1.43	172	1.68	197	1.92
123	1.20	148	1.44	173	1.69	198	1.93
124	1.21	149	1.45	174	1.70	199	1.94
125	1.22	150	1.46	175	1.71	200	1.95

EXPANSION TABLE:

(*Without* **γTU**, Load factor):

STEEL: $M_t = (\Delta T)^*(\alpha)^*(L)$

$\Delta T = 125°$ **(-20°F to +105°F)** (NHDOT Bridge Design Manual, Chap. 7, Sec. 7.4)

$\alpha = 6.5 \times 10^{-6}$ **IN/IN/°F** (AASHTO 6.4.1)

SPAN LENGTH (FT)	M_t (IN)	SPAN LENGTH (FT)	M_t (IN)	SPAN LENGTH (FT)	M_t (IN)	SPAN LENGTH (FT)	M_t (IN)
201	1.96	226	2.20	251	2.45	276	2.69
202	1.97	227	2.21	252	2.46	277	2.70
203	1.98	228	2.22	253	2.47	278	2.71
204	1.99	229	2.23	254	2.48	279	2.72
205	2.00	230	2.24	255	2.49	280	2.73
206	2.01	231	2.25	256	2.50	281	2.74
207	2.02	232	2.26	257	2.51	282	2.75
208	2.03	233	2.27	258	2.52	283	2.76
209	2.04	234	2.28	259	2.53	284	2.77
210	2.05	235	2.29	260	2.54	285	2.78
211	2.06	236	2.30	261	2.54	286	2.79
212	2.07	237	2.31	262	2.55	287	2.80
213	2.08	238	2.32	263	2.56	288	2.81
214	2.09	239	2.33	264	2.57	289	2.82
215	2.10	240	2.34	265	2.58	290	2.83
216	2.11	241	2.35	266	2.59	291	2.84
217	2.12	242	2.36	267	2.60	292	2.85
218	2.13	243	2.37	268	2.61	293	2.86
219	2.14	244	2.38	269	2.62	294	2.87
220	2.15	245	2.39	270	2.63	295	2.88
221	2.15	246	2.40	271	2.64	296	2.89
222	2.16	247	2.41	272	2.65	297	2.90
223	2.17	248	2.42	273	2.66	298	2.91
224	2.18	249	2.43	274	2.67	299	2.92
225	2.19	250	2.44	275	2.68	300	2.93

SPAN LENGTH (FT)	M_t (IN)	SPAN LENGTH (FT)	M_t (IN)	SPAN LENGTH (FT)	M_t (IN)	SPAN LENGTH (FT)	M_t (IN)
301	2.93	326	3.18	351	3.42	376	3.67
302	2.94	327	3.19	352	3.43	377	3.68
303	2.95	328	3.20	353	3.44	378	3.69
304	2.96	329	3.21	354	3.45	379	3.70
305	2.97	330	3.22	355	3.46	380	3.71
306	2.98	331	3.23	356	3.47	381	3.71
307	2.99	332	3.24	357	3.48	382	3.72
308	3.00	333	3.25	358	3.49	383	3.73
309	3.01	334	3.26	359	3.50	384	3.74
310	3.02	335	3.27	360	3.51	385	3.75
311	3.03	336	3.28	361	3.52	386	3.76
312	3.04	337	3.29	362	3.53	387	3.77
313	3.05	338	3.30	363	3.54	388	3.78
314	3.06	339	3.31	364	3.55	389	3.79
315	3.07	340	3.32	365	3.56	390	3.80
316	3.08	341	3.32	366	3.57	391	3.81
317	3.09	342	3.33	367	3.58	392	3.82
318	3.10	343	3.34	368	3.59	393	3.83
319	3.11	344	3.35	369	3.60	394	3.84
320	3.12	345	3.36	370	3.61	395	3.85
321	3.13	346	3.37	371	3.62	396	3.86
322	3.14	347	3.38	372	3.63	397	3.87
323	3.15	348	3.39	373	3.64	398	3.88
324	3.16	349	3.40	374	3.65	399	3.89
325	3.17	350	3.41	375	3.66	400	3.90

EXPANSION TABLE

(*Including* **γTU**, Load factor for force effect due to uniform temperature):

CONCRETE: $M_t = (\Delta T)*(\alpha)*(L)*(\gamma TU)$

ΔT= 80° (0°F to +80°F) (NHDOT Bridge Design Manual, Chap. 7, Sec. 7.4)

$\alpha = 6.0 \times 10^{-6}$ IN/IN/°F (AASHTO 5.4.2.2)

γTU = 1.2 (AASHTO 3.4.1-1)

SPAN LENGTH (FT)	M_t (IN)	SPAN LENGTH (FT)	M_t (IN)	SPAN LENGTH (FT)	M_t (IN)	SPAN LENGTH (FT)	M_t (IN)
1	0.01	26	0.18	51	0.35	76	0.53
2	0.01	27	0.19	52	0.36	77	0.53
3	0.02	28	0.19	53	0.37	78	0.54
4	0.03	29	0.20	54	0.37	79	0.55
5	0.03	30	0.21	55	0.38	80	0.55
6	0.04	31	0.21	56	0.39	81	0.56
7	0.05	32	0.22	57	0.39	82	0.57
8	0.06	33	0.23	58	0.40	83	0.57
9	0.06	34	0.24	59	0.41	84	0.58
10	0.07	35	0.24	60	0.41	85	0.59
11	0.08	36	0.25	61	0.42	86	0.59
12	0.08	37	0.26	62	0.43	87	0.60
13	0.09	38	0.26	63	0.44	88	0.61
14	0.10	39	0.27	64	0.44	89	0.62
15	0.10	40	0.28	65	0.45	90	0.62
16	0.11	41	0.28	66	0.46	91	0.63
17	0.12	42	0.29	67	0.46	92	0.64
18	0.12	43	0.30	68	0.47	93	0.64
19	0.13	44	0.30	69	0.48	94	0.65
20	0.14	45	0.31	70	0.48	95	0.66
21	0.15	46	0.32	71	0.49	96	0.66
22	0.15	47	0.32	72	0.50	97	0.67
23	0.16	48	0.33	73	0.50	98	0.68
24	0.17	49	0.34	74	0.51	99	0.68
25	0.17	50	0.35	75	0.52	100	0.69

SPAN LENGTH (FT)	M_t (IN)	SPAN LENGTH (FT)	M_t (IN)	SPAN LENGTH (FT)	M_t (IN)	SPAN LENGTH (FT)	M_t (IN)
101	0.70	126	0.87	151	1.04	176	1.22
102	0.71	127	0.88	152	1.05	177	1.22
103	0.71	128	0.88	153	1.06	178	1.23
104	0.72	129	0.89	154	1.06	179	1.24
105	0.73	130	0.90	155	1.07	180	1.24
106	0.73	131	0.91	156	1.08	181	1.25
107	0.74	132	0.91	157	1.09	182	1.26
108	0.75	133	0.92	158	1.09	183	1.26
109	0.75	134	0.93	159	1.10	184	1.27
110	0.76	135	0.93	160	1.11	185	1.28
111	0.77	136	0.94	161	1.11	186	1.29
112	0.77	137	0.95	162	1.12	187	1.29
113	0.78	138	0.95	163	1.13	188	1.30
114	0.79	139	0.96	164	1.13	189	1.31
115	0.79	140	0.97	165	1.14	190	1.31
116	0.80	141	0.97	166	1.15	191	1.32
117	0.81	142	0.98	167	1.15	192	1.33
118	0.82	143	0.99	168	1.16	193	1.33
119	0.82	144	1.00	169	1.17	194	1.34
120	0.83	145	1.00	170	1.18	195	1.35
121	0.84	146	1.01	171	1.18	196	1.35
122	0.84	147	1.02	172	1.19	197	1.36
123	0.85	148	1.02	173	1.20	198	1.37
124	0.86	149	1.03	174	1.20	199	1.38
125	0.86	150	1.04	175	1.21	200	1.38

EXPANSION TABLE

(*Including* **γTU**, Load factor for force effect due to uniform temperature):

CONCRETE: $M_t = (\Delta T)*(\alpha)*(L)*(\gamma TU)$

$\Delta T = 80°$ **(0°F to +80°F)** (NHDOT Bridge Design Manual, Chap. 7, Sec. 7.4)

$\alpha = 6.0 \times 10^{-6}$ **IN/IN/°F** (AASHTO 5.4.2.2)

γTU = 1.2 (AASHTO 3.4.1-1)

SPAN LENGTH (FT)	M_t (IN)	SPAN LENGTH (FT)	M_t (IN)	SPAN LENGTH (FT)	M_t (IN)	SPAN LENGTH (FT)	M_t (IN)
201	1.39	226	1.56	251	1.73	276	1.91
202	1.40	227	1.57	252	1.74	277	1.91
203	1.40	228	1.58	253	1.75	278	1.92
204	1.41	229	1.58	254	1.76	279	1.93
205	1.42	230	1.59	255	1.76	280	1.94
206	1.42	231	1.60	256	1.77	281	1.94
207	1.43	232	1.60	257	1.78	282	1.95
208	1.44	233	1.61	258	1.78	283	1.96
209	1.44	234	1.62	259	1.79	284	1.96
210	1.45	235	1.62	260	1.80	285	1.97
211	1.46	236	1.63	261	1.80	286	1.98
212	1.47	237	1.64	262	1.81	287	1.98
213	1.47	238	1.65	263	1.82	288	1.99
214	1.48	239	1.65	264	1.82	289	2.00
215	1.49	240	1.66	265	1.83	290	2.00
216	1.49	241	1.67	266	1.84	291	2.01
217	1.50	242	1.67	267	1.85	292	2.02
218	1.51	243	1.68	268	1.85	293	2.03
219	1.51	244	1.69	269	1.86	294	2.03
220	1.52	245	1.69	270	1.87	295	2.04
221	1.53	246	1.70	271	1.87	296	2.05
222	1.53	247	1.71	272	1.88	297	2.05
223	1.54	248	1.71	273	1.89	298	2.06
224	1.55	249	1.72	274	1.89	299	2.07
225	1.56	250	1.73	275	1.90	300	2.07

SPAN LENGTH (FT)	M_t (IN)	SPAN LENGTH (FT)	M_t (IN)	SPAN LENGTH (FT)	M_t (IN)	SPAN LENGTH (FT)	M_t (IN)
301	2.08	326	2.25	351	2.43	376	2.60
302	2.09	327	2.26	352	2.43	377	2.61
303	2.09	328	2.27	353	2.44	378	2.61
304	2.10	329	2.27	354	2.45	379	2.62
305	2.11	330	2.28	355	2.45	380	2.63
306	2.12	331	2.29	356	2.46	381	2.63
307	2.12	332	2.29	357	2.47	382	2.64
308	2.13	333	2.30	358	2.47	383	2.65
309	2.14	334	2.31	359	2.48	384	2.65
310	2.14	335	2.32	360	2.49	385	2.66
311	2.15	336	2.32	361	2.50	386	2.67
312	2.16	337	2.33	362	2.50	387	2.67
313	2.16	338	2.34	363	2.51	388	2.68
314	2.17	339	2.34	364	2.52	389	2.69
315	2.18	340	2.35	365	2.52	390	2.70
316	2.18	341	2.36	366	2.53	391	2.70
317	2.19	342	2.36	367	2.54	392	2.71
318	2.20	343	2.37	368	2.54	393	2.72
319	2.20	344	2.38	369	2.55	394	2.72
320	2.21	345	2.38	370	2.56	395	2.73
321	2.22	346	2.39	371	2.56	396	2.74
322	2.23	347	2.40	372	2.57	397	2.74
323	2.23	348	2.41	373	2.58	398	2.75
324	2.24	349	2.41	374	2.59	399	2.76
325	2.25	350	2.42	375	2.59	400	2.76

EXPANSION TABLE:

(*Without* **γTU**, Load factor):

CONCRETE: $M_t = (\Delta T)^*(\alpha)^*(L)$

$\Delta T = 80°$ **(0°F to +80°F)** (NHDOT Bridge Design Manual, Chap. 7, Sec. 7.4)

$\alpha = 6.0 \times 10^{-6}$ **IN/IN/°F** (AASHTO 5.4.2.2)

SPAN LENGTH (FT)	M_t (IN)	SPAN LENGTH (FT)	M_t (IN)	SPAN LENGTH (FT)	M_t (IN)	SPAN LENGTH (FT)	M_t (IN)
1	0.01	26	0.15	51	0.29	76	0.44
2	0.01	27	0.16	52	0.30	77	0.44
3	0.02	28	0.16	53	0.31	78	0.45
4	0.02	29	0.17	54	0.31	79	0.46
5	0.03	30	0.17	55	0.32	80	0.46
6	0.03	31	0.18	56	0.32	81	0.47
7	0.04	32	0.18	57	0.33	82	0.47
8	0.05	33	0.19	58	0.33	83	0.48
9	0.05	34	0.20	59	0.34	84	0.48
10	0.06	35	0.20	60	0.35	85	0.49
11	0.06	36	0.21	61	0.35	86	0.50
12	0.07	37	0.21	62	0.36	87	0.50
13	0.07	38	0.22	63	0.36	88	0.51
14	0.08	39	0.22	64	0.37	89	0.51
15	0.09	40	0.23	65	0.37	90	0.52
16	0.09	41	0.24	66	0.38	91	0.52
17	0.10	42	0.24	67	0.39	92	0.53
18	0.10	43	0.25	68	0.39	93	0.54
19	0.11	44	0.25	69	0.40	94	0.54
20	0.12	45	0.26	70	0.40	95	0.55
21	0.12	46	0.26	71	0.41	96	0.55
22	0.13	47	0.27	72	0.41	97	0.56
23	0.13	48	0.28	73	0.42	98	0.56
24	0.14	49	0.28	74	0.43	99	0.57
25	0.14	50	0.29	75	0.43	100	0.58

SPAN LENGTH (FT)	M_t (IN)	SPAN LENGTH (FT)	M_t (IN)	SPAN LENGTH (FT)	M_t (IN)	SPAN LENGTH (FT)	M_t (IN)
101	0.58	126	0.73	151	0.87	176	1.01
102	0.59	127	0.73	152	0.88	177	1.02
103	0.59	128	0.74	153	0.88	178	1.03
104	0.60	129	0.74	154	0.89	179	1.03
105	0.60	130	0.75	155	0.89	180	1.04
106	0.61	131	0.75	156	0.90	181	1.04
107	0.62	132	0.76	157	0.90	182	1.05
108	0.62	133	0.77	158	0.91	183	1.05
109	0.63	134	0.77	159	0.92	184	1.06
110	0.63	135	0.78	160	0.92	185	1.07
111	0.64	136	0.78	161	0.93	186	1.07
112	0.65	137	0.79	162	0.93	187	1.08
113	0.65	138	0.79	163	0.94	188	1.08
114	0.66	139	0.80	164	0.94	189	1.09
115	0.66	140	0.81	165	0.95	190	1.09
116	0.67	141	0.81	166	0.96	191	1.10
117	0.67	142	0.82	167	0.96	192	1.11
118	0.68	143	0.82	168	0.97	193	1.11
119	0.69	144	0.83	169	0.97	194	1.12
120	0.69	145	0.84	170	0.98	195	1.12
121	0.70	146	0.84	171	0.98	196	1.13
122	0.70	147	0.85	172	0.99	197	1.13
123	0.71	148	0.85	173	1.00	198	1.14
124	0.71	149	0.86	174	1.00	199	1.15
125	0.72	150	0.86	175	1.01	200	1.15

EXPANSION TABLE:

(*Without* **γTU**, Load factor):

CONCRETE: $M_t = (\Delta T)^*(\alpha)^*(L)$

ΔT= 80° (0°F to +80°F) (NHDOT Bridge Design Manual, Chap. 7, Sec. 7.4)

α = 6.0 x 10^{-6} IN/IN/°F (AASHTO 5.4.2.2)

SPAN LENGTH (FT)	M_t (IN)	SPAN LENGTH (FT)	M_t (IN)	SPAN LENGTH (FT)	M_t (IN)	SPAN LENGTH (FT)	M_t (IN)
201	1.16	226	1.30	251	1.45	276	1.59
202	1.16	227	1.31	252	1.45	277	1.60
203	1.17	228	1.31	253	1.46	278	1.60
204	1.18	229	1.32	254	1.46	279	1.61
205	1.18	230	1.32	255	1.47	280	1.61
206	1.19	231	1.33	256	1.47	281	1.62
207	1.19	232	1.34	257	1.48	282	1.62
208	1.20	233	1.34	258	1.49	283	1.63
209	1.20	234	1.35	259	1.49	284	1.64
210	1.21	235	1.35	260	1.50	285	1.64
211	1.22	236	1.36	261	1.50	286	1.65
212	1.22	237	1.37	262	1.51	287	1.65
213	1.23	238	1.37	263	1.51	288	1.66
214	1.23	239	1.38	264	1.52	289	1.66
215	1.24	240	1.38	265	1.53	290	1.67
216	1.24	241	1.39	266	1.53	291	1.68
217	1.25	242	1.39	267	1.54	292	1.68
218	1.26	243	1.40	268	1.54	293	1.69
219	1.26	244	1.41	269	1.55	294	1.69
220	1.27	245	1.41	270	1.56	295	1.70
221	1.27	246	1.42	271	1.56	296	1.70
222	1.28	247	1.42	272	1.57	297	1.71
223	1.28	248	1.43	273	1.57	298	1.72
224	1.29	249	1.43	274	1.58	299	1.72
225	1.30	250	1.44	275	1.58	300	1.73

SPAN LENGTH (FT)	M_t (IN)	SPAN LENGTH (FT)	M_t (IN)	SPAN LENGTH (FT)	M_t (IN)	SPAN LENGTH (FT)	M_t (IN)
301	1.73	326	1.88	351	2.02	376	2.17
302	1.74	327	1.88	352	2.03	377	2.17
303	1.75	328	1.89	353	2.03	378	2.18
304	1.75	329	1.90	354	2.04	379	2.18
305	1.76	330	1.90	355	2.04	380	2.19
306	1.76	331	1.91	356	2.05	381	2.19
307	1.77	332	1.91	357	2.06	382	2.20
308	1.77	333	1.92	358	2.06	383	2.21
309	1.78	334	1.92	359	2.07	384	2.21
310	1.79	335	1.93	360	2.07	385	2.22
311	1.79	336	1.94	361	2.08	386	2.22
312	1.80	337	1.94	362	2.09	387	2.23
313	1.80	338	1.95	363	2.09	388	2.23
314	1.81	339	1.95	364	2.10	389	2.24
315	1.81	340	1.96	365	2.10	390	2.25
316	1.82	341	1.96	366	2.11	391	2.25
317	1.83	342	1.97	367	2.11	392	2.26
318	1.83	343	1.98	368	2.12	393	2.26
319	1.84	344	1.98	369	2.13	394	2.27
320	1.84	345	1.99	370	2.13	395	2.28
321	1.85	346	1.99	371	2.14	396	2.28
322	1.85	347	2.00	372	2.14	397	2.29
323	1.86	348	2.00	373	2.15	398	2.29
324	1.87	349	2.01	374	2.15	399	2.30
325	1.87	350	2.02	375	2.16	400	2.30

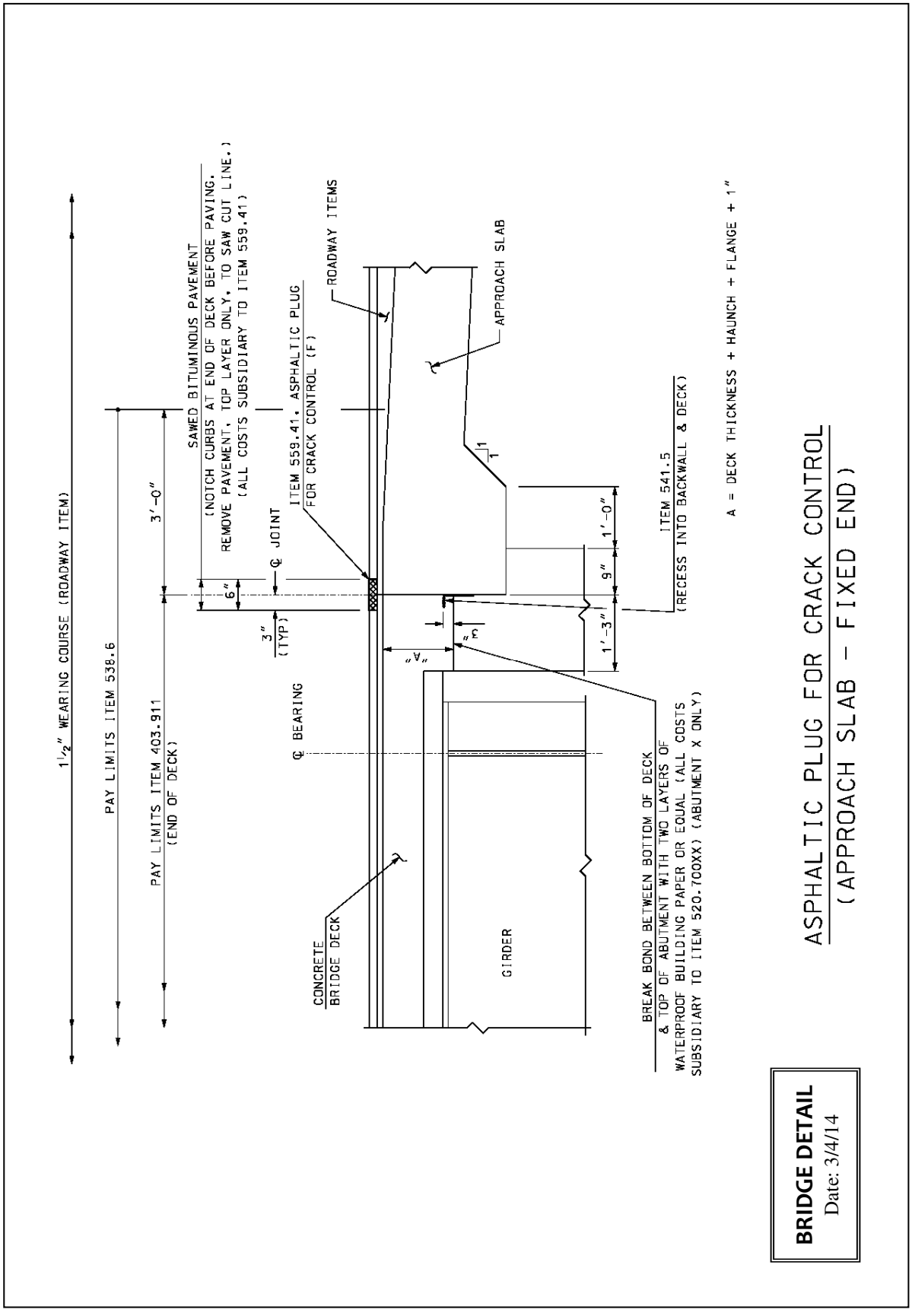
1½" WEARING COURSE (ROADWAY ITEM)
PAY LIMITS ITEM 538.6
PAY LIMITS ITEM 403.911
(END OF DECK)
3'-0"
SAWED BITUMINOUS PAVEMENT
(NOTCH CURBS AT END OF DECK BEFORE PAVING.
REMOVE PAVEMENT, TOP LAYER ONLY, TO SAW CUT LINE.)
(ALL COSTS SUBSIDIARY TO ITEM 559.41)
℄ JOINT
6"
3"
(TYP)
ITEM 559.41, ASPHALTIC PLUG
FOR CRACK CONTROL (F)
ROADWAY ITEMS
APPROACH SLAB
1
1
℄ BEARING
"A"
"B"
1'-3"
9"
1'-0"
ITEM 541.5
(RECESS INTO BACKWALL & DECK)
A = DECK THICKNESS + HAUNCH + FLANGE + 1"
CONCRETE
BRIDGE DECK
GIRDER
BREAK BOND BETWEEN BOTTOM OF DECK
& TOP OF ABUTMENT WITH TWO LAYERS OF
WATERPROOF BUILDING PAPER OR EQUAL (ALL COSTS
SUBSIDIARY TO ITEM 520.700XX) (ABUTMENT X ONLY)
ASPHALTIC PLUG FOR CRACK CONTROL
(APPROACH SLAB - FIXED END)
BRIDGE DETAIL
Date: 3/4/14

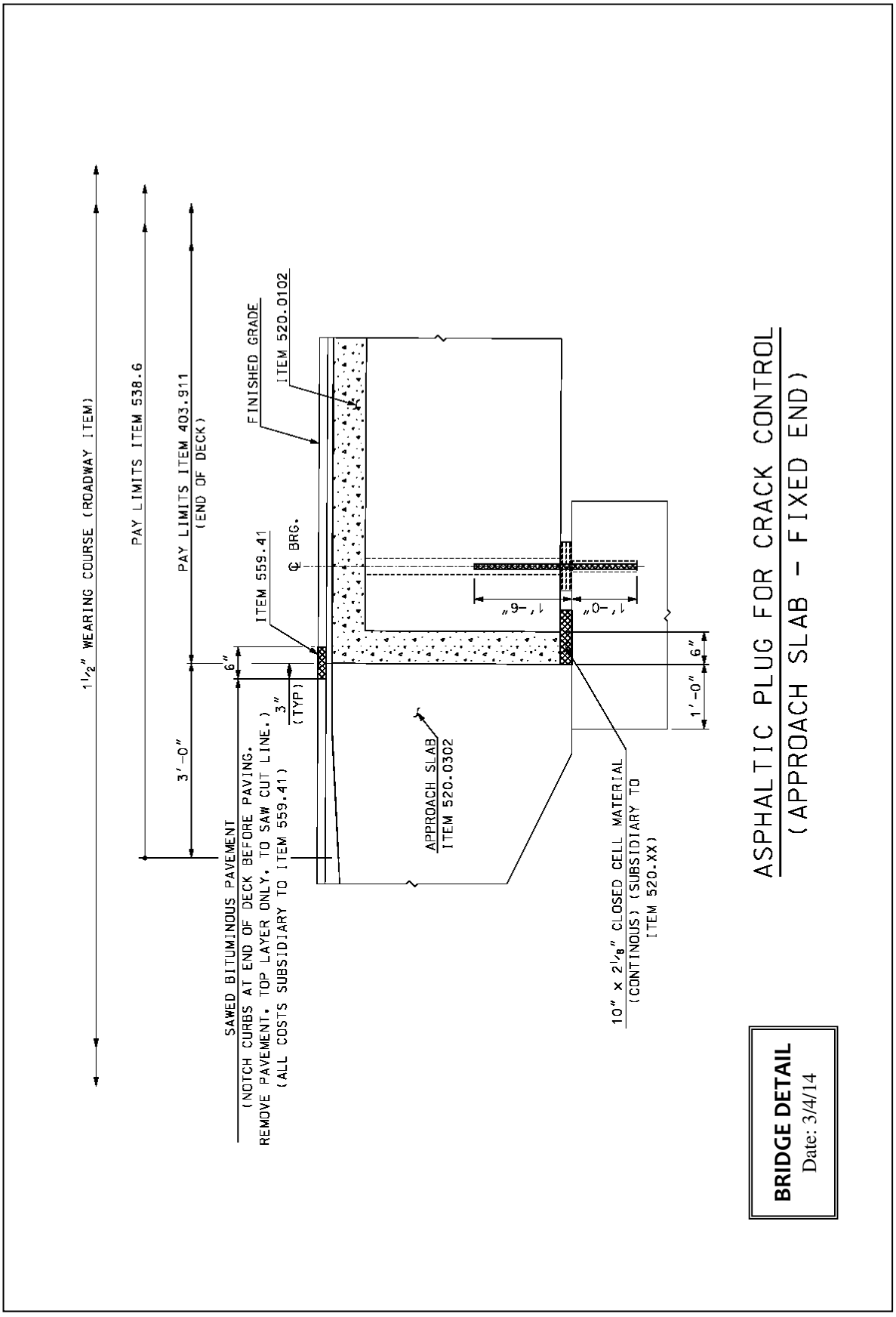
1½" WEARING COURSE (ROADWAY ITEM)
PAY LIMITS ITEM 538.6
PAY LIMITS ITEM 403.911
(END OF DECK)
FINISHED GRADE
ITEM 520.0102
℄ BRG.
ITEM 559.41
6"
3'-0"
3"
(TYP)
SAWED BITUMINOUS PAVEMENT
(NOTCH CURBS AT END OF DECK BEFORE PAVING.
REMOVE PAVEMENT, TOP LAYER ONLY, TO SAW CUT LINE.)
(ALL COSTS SUBSIDIARY TO ITEM 559.41)
APPROACH SLAB
ITEM 520.0302
1'-6"
1'-0"
1'-0"
6"
10" x 2⅛" CLOSED CELL MATERIAL
(CONTINOUS) (SUBSIDIARY TO
ITEM 520.XX)
ASPHALTIC PLUG FOR CRACK CONTROL
(APPROACH SLAB - FIXED END)
BRIDGE DETAIL
Date: 3/4/14

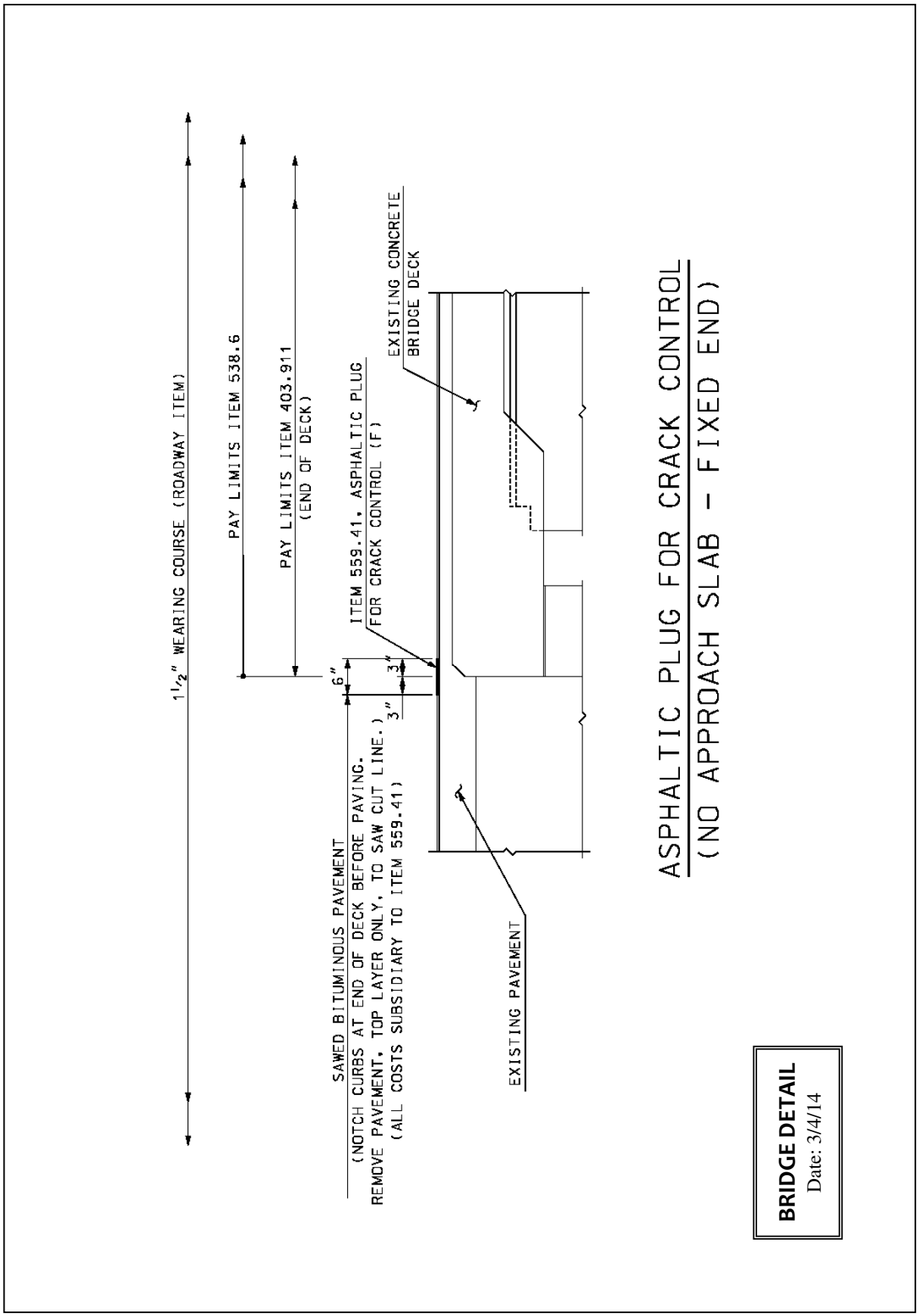
ASPHALTIC PLUG FOR CRACK CONTROL
(NO APPROACH SLAB - FIXED END)
1½" WEARING COURSE (ROADWAY ITEM)
PAY LIMITS ITEM 538.6
PAY LIMITS ITEM 403.911
(END OF DECK)
ITEM 559.41, ASPHALTIC PLUG
FOR CRACK CONTROL (F)
EXISTING CONCRETE
BRIDGE DECK
6"
3"
3"
SAWED BITUMINOUS PAVEMENT
(NOTCH CURBS AT END OF DECK BEFORE PAVING.
REMOVE PAVEMENT, TOP LAYER ONLY, TO SAW CUT LINE.)
(ALL COSTS SUBSIDIARY TO ITEM 559.41)
EXISTING PAVEMENT
BRIDGE DETAIL
Date: 3/4/14

Page intentionally left blank.

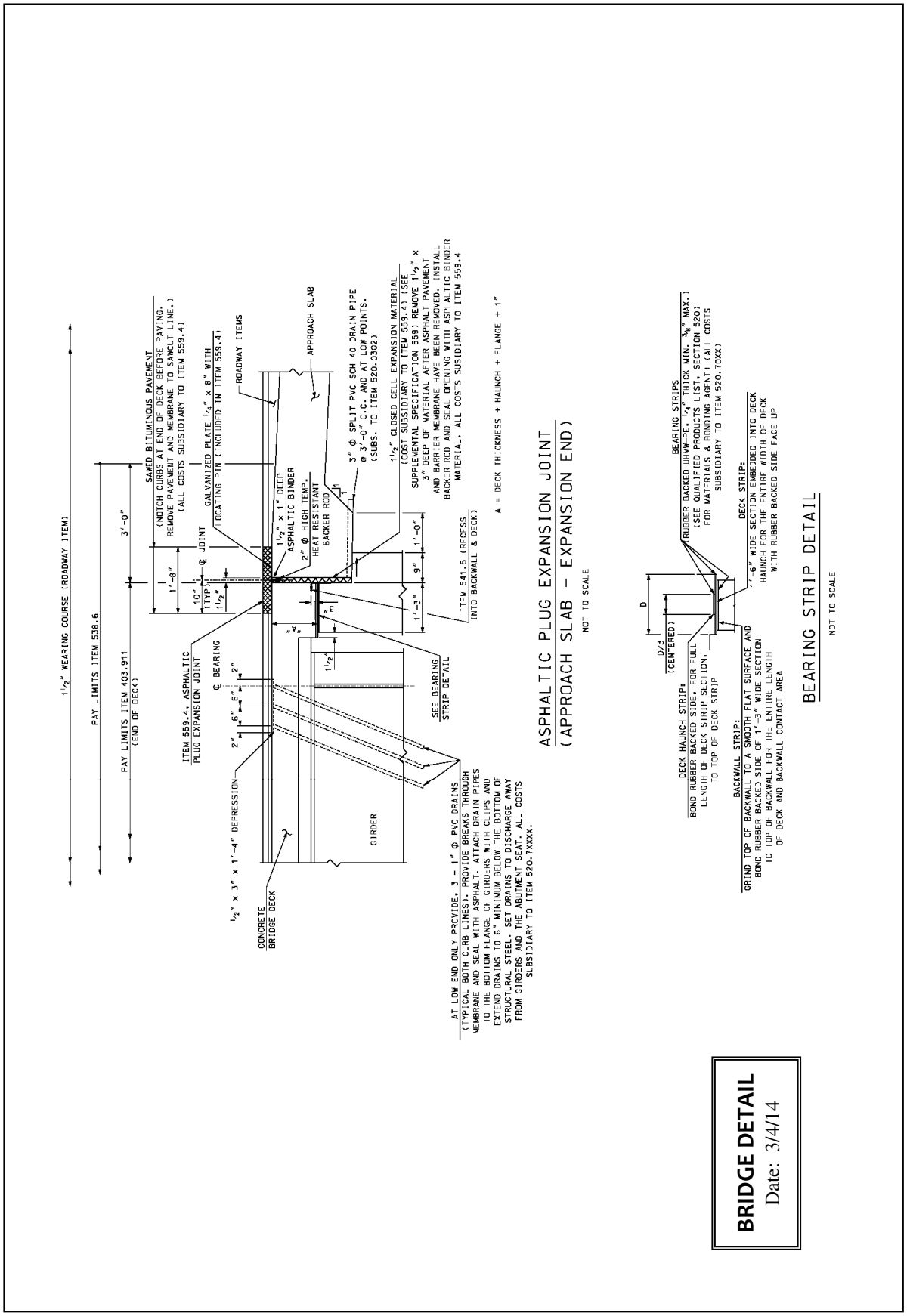
1½" WEARING COURSE (ROADWAY ITEM)
PAY LIMITS ITEM 538.6
PAY LIMITS ITEM 403.911 (END OF DECK)
3'-0"
SAWED BITUMINOUS PAVEMENT (NOTCH CURBS AT END OF DECK BEFORE PAVING. REMOVE PAVEMENT AND MEMBRANE TO SAWCUT LINE.) (ALL COSTS SUBSIDIARY TO ITEM 559.4)
1'-8"
10" TYP.
℄ JOINT
1½"
GALVANIZED PLATE ¼" x 8" WITH LOCATING PIN (INCLUDED IN ITEM 559.4)
ROADWAY ITEMS
APPROACH SLAB
1½" x 1" DEEP ASPHALTIC BINDER
2" Ø HIGH TEMP. HEAT RESISTANT BACKER ROD
3" Ø SPLIT PVC SCH 40 DRAIN PIPE @ 3'-0" O.C. AND AT LOW POINTS. (SUBS. TO ITEM 520.0302)
1½" CLOSED CELL EXPANSION MATERIAL (COST SUBSIDIARY TO ITEM 559.4) (SEE SUPPLEMENTAL SPECIFICATION 559) REMOVE 1½" x 3" DEEP OF MATERIAL AFTER ASPHALT PAVEMENT AND BARRIER MEMBRANE HAVE BEEN REMOVED. INSTALL BACKER ROD AND SEAL OPENING WITH ASPHALTIC BINDER MATERIAL. ALL COSTS SUBSIDIARY TO ITEM 559.4
A = DECK THICKNESS + HAUNCH + FLANGE + 1"
1'-3"
9"
1'-0"
ITEM 541.5 (RECESS INTO BACKWALL & DECK)
ITEM 559.4, ASPHALTIC PLUG EXPANSION JOINT
℄ BEARING
2"
6"
6"
2"
1½"
SEE BEARING STRIP DETAIL
1½" x 3" x 1'-4" DEPRESSION
CONCRETE BRIDGE DECK
GIRDER
AT LOW END ONLY PROVIDE: 3 - 1" Ø PVC DRAINS (TYPICAL BOTH CURB LINES). PROVIDE BREAKS THROUGH MEMBRANE AND SEAL WITH ASPHALT. ATTACH DRAIN PIPES TO THE BOTTOM FLANGE OF GIRDERS WITH CLIPS AND EXTEND DRAINS TO 6" MINIMUM BELOW THE BOTTOM OF STRUCTURAL STEEL. SET DRAINS TO DISCHARGE AWAY FROM GIRDERS AND THE ABUTMENT SEAT. ALL COSTS SUBSIDIARY TO ITEM 520.7XXXX.
ASPHALTIC PLUG EXPANSION JOINT
(APPROACH SLAB - EXPANSION END)
NOT TO SCALE
D
D/3 (CENTERED)
DECK HAUNCH STRIP:
BOND RUBBER BACKED SIDE, FOR FULL LENGTH OF DECK STRIP SECTION, TO TOP OF DECK STRIP
BACKWALL STRIP:
GRIND TOP OF BACKWALL TO A SMOOTH, FLAT SURFACE AND BOND RUBBER BACKED SIDE OF 1'-3" WIDE SECTION TO TOP OF BACKWALL FOR THE ENTIRE LENGTH OF DECK AND BACKWALL CONTACT AREA.
BEARING STRIPS
RUBBER BACKED UHMW-PE, ¼" THICK MIN. ⅜" MAX. (SEE QUALIFIED PRODUCTS LIST, SECTION 520) FOR MATERIALS & BONDING AGENT) (ALL COSTS SUBSIDIARY TO ITEM 520.70XX)
DECK STRIP:
1'-6" WIDE SECTION EMBEDDED INTO DECK HAUNCH FOR THE ENTIRE WIDTH OF DECK WITH RUBBER BACKED SIDE FACE UP
BEARING STRIP DETAIL
NOT TO SCALE
BRIDGE DETAIL
Date: 3/4/14

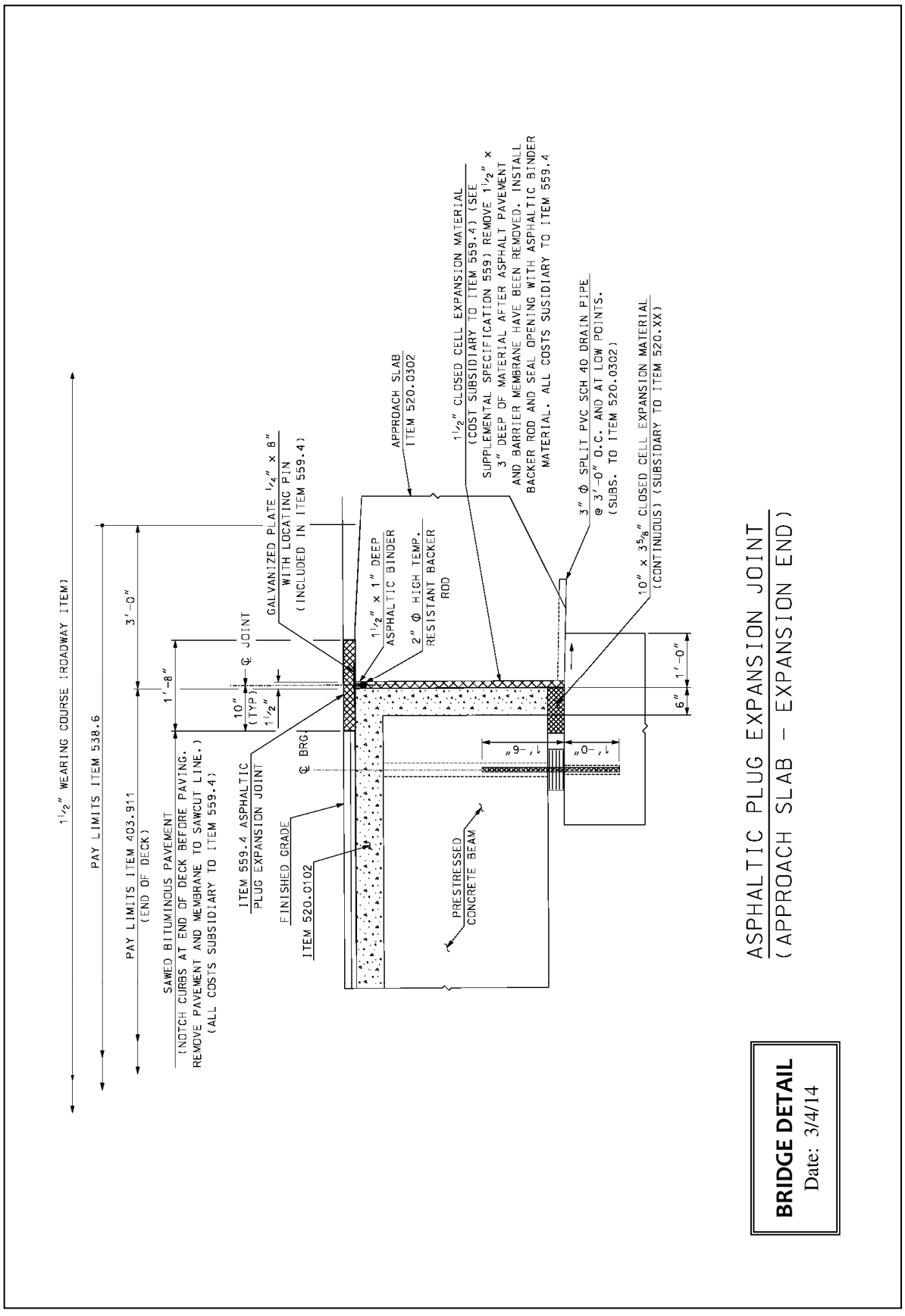
1½" WEARING COURSE (ROADWAY ITEM)
PAY LIMITS ITEM 538.6
PAY LIMITS ITEM 403.911
(END OF DECK)
SAWED BITUMINOUS PAVEMENT
(NOTCH CURBS AT END OF DECK BEFORE PAVING. REMOVE PAVEMENT AND MEMBRANE TO SAWCUT LINE.)
(ALL COSTS SUBSIDIARY TO ITEM 559.4)
3'-0"
1'-8"
℄ JOINT
10" (TYP.)
1½"
ITEM 559.4 ASPHALTIC PLUG EXPANSION JOINT
FINISHED GRADE
ITEM 520.0102
℄ BRG.
GALVANIZED PLATE ¼" x 8" WITH LOCATING PIN (INCLUDED IN ITEM 559.4)
1½" x 1" DEEP ASPHALTIC BINDER
2" Ø HIGH TEMP. RESISTANT BACKER ROD
APPROACH SLAB ITEM 520.0302
1½" CLOSED CELL EXPANSION MATERIAL (COST SUBSIDIARY TO ITEM 559.4) (SEE SUPPLEMENTAL SPECIFICATION 559) REMOVE 1½" x 3" DEEP OF MATERIAL AFTER ASPHALT PAVEMENT AND BARRIER MEMBRANE HAVE BEEN REMOVED. INSTALL BACKER ROD AND SEAL OPENING WITH ASPHALTIC BINDER MATERIAL. ALL COSTS SUSIDIARY TO ITEM 559.4
3" Ø SPLIT PVC SCH 40 DRAIN PIPE @ 3'-0" O.C. AND AT LOW POINTS. (SUBS. TO ITEM 520.0302)
10" x 3⅝" CLOSED CELL EXPANSION MATERIAL (CONTINUOUS) (SUBSIDARY TO ITEM 520.XX)
1'-0"
6"
1'-6"
1'-0"
PRESTRESSED CONCRETE BEAM
ASPHALTIC PLUG EXPANSION JOINT
(APPROACH SLAB - EXPANSION END)
BRIDGE DETAIL
Date: 3/4/14

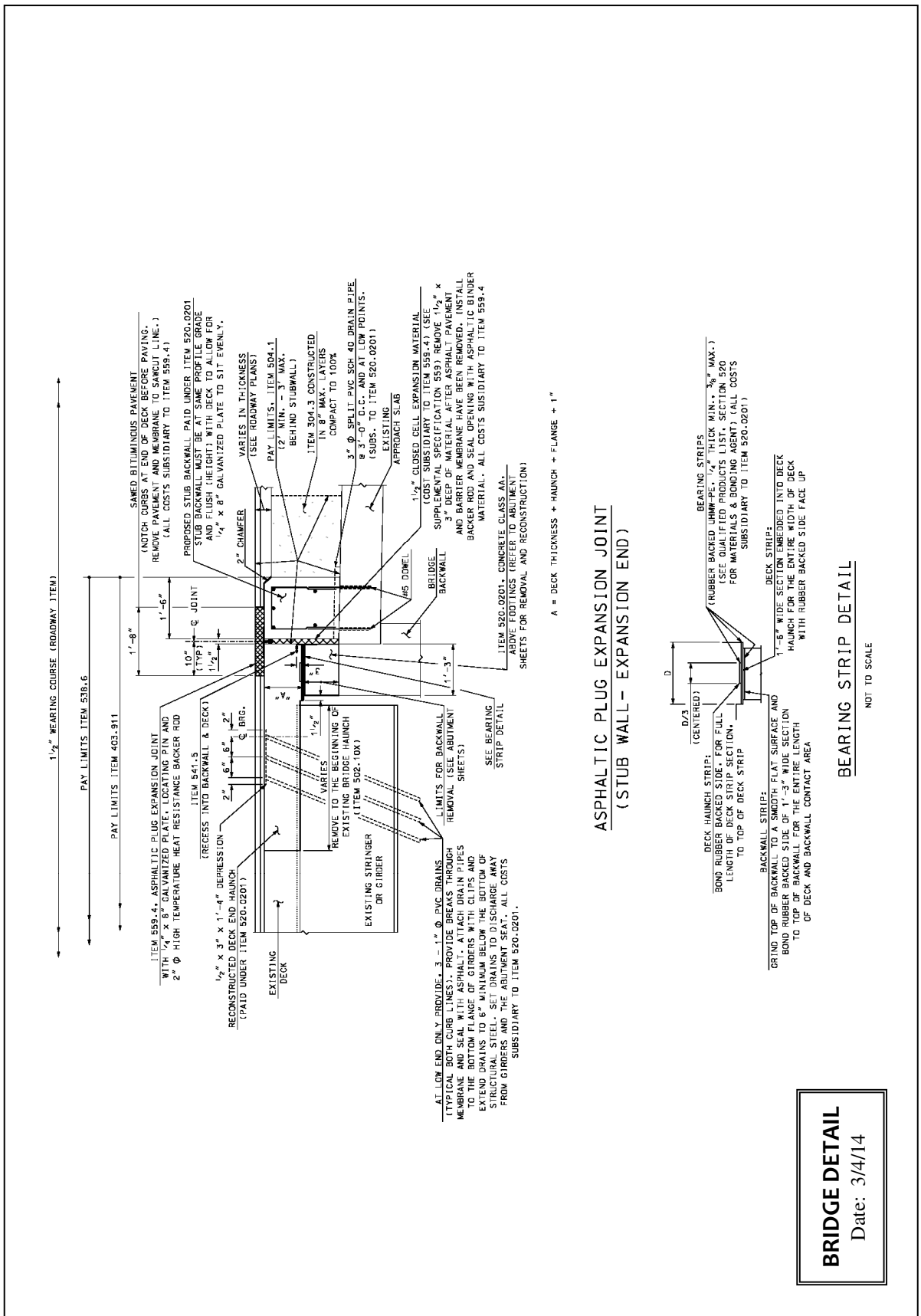
1½" WEARING COURSE (ROADWAY ITEM)
PAY LIMITS ITEM 538.6
PAY LIMITS ITEM 403.911
ITEM 559.4, ASPHALTIC PLUG EXPANSION JOINT WITH ¼" x 8" GALVANIZED PLATE, LOCATING PIN AND 2" Φ HIGH TEMPERATURE HEAT RESISTANCE BACKER ROD
ITEM 541.5 (RECESS INTO BACKWALL & DECK)
½" x 3" x 1'-4" DEPRESSION
RECONSTRUCTED DECK END HAUNCH (PAID UNDER ITEM 520.0201)
EXISTING DECK
EXISTING STRINGER OR GIRDER
REMOVE TO THE BEGINNING OF EXISTING BRIDGE HAUNCH (ITEM 502.10X)
VARIES
LIMITS FOR BACKWALL REMOVAL (SEE ABUTMENT SHEETS)
SEE BEARING STRIP DETAIL
AT LOW END ONLY PROVIDE, 3 - 1" Φ PVC DRAINS (TYPICAL BOTH CURB LINES). PROVIDE BREAKS THROUGH MEMBRANE AND SEAL WITH ASPHALT. ATTACH DRAIN PIPES TO THE BOTTOM FLANGE OF GIRDERS WITH CLIPS AND EXTEND DRAINS TO 6" MINIMUM BELOW THE BOTTOM OF STRUCTURAL STEEL. SET DRAINS TO DISCHARGE AWAY FROM GIRDERS AND THE ABUTMENT SEAT. ALL COSTS SUBSIDIARY TO ITEM 520.0201.
SAWED BITUMINOUS PAVEMENT (NOTCH CURBS AT END OF DECK BEFORE PAVING. REMOVE PAVEMENT AND MEMBRANE TO SAWCUT LINE.) (ALL COSTS SUBSIDIARY TO ITEM 559.4)
PROPOSED STUB BACKWALL PAID UNDER ITEM 520.0201 STUB BACKWALL MUST BE AT SAME PROFILE GRADE AND FLUSH (HEIGHT) WITH DECK TO ALLOW FOR ¼" x 8" GALVANIZED PLATE TO SIT EVENLY.
2" CHAMFER
VARIES IN THICKNESS (SEE ROADWAY PLANS)
PAY LIMITS, ITEM 504.1 (2' MIN. - 3' MAX. BEHIND STUBWALL)
ITEM 304.3 CONSTRUCTED IN 8" MAX. LAYERS COMPACT TO 100%
3" Φ SPLIT PVC SCH 40 DRAIN PIPE @ 3'-0" O.C. AND AT LOW POINTS. (SUBS. TO ITEM 520.0201)
EXISTING APPROACH SLAB
1½" CLOSED CELL EXPANSION MATERIAL (COST SUBSIDIARY TO ITEM 559.4) (SEE SUPPLEMENTAL SPECIFICATION 559) REMOVE 1½" x 3" DEEP OF MATERIAL AFTER ASPHALT PAVEMENT AND BARRIER MEMBRANE HAVE BEEN REMOVED. INSTALL BACKER ROD AND SEAL OPENING WITH ASPHALTIC BINDER MATERIAL. ALL COSTS SUBSIDIARY TO ITEM 559.4
#5 DOWEL
BRIDGE BACKWALL
ITEM 520.0201, CONCRETE CLASS AA. ABOVE FOOTINGS (REFER TO ABUTMENT SHEETS FOR REMOVAL AND RECONSTRUCTION)
A = DECK THICKNESS + HAUNCH + FLANGE + 1"
1'-8"
1'-6"
℄ JOINT
10" (TYP)
1½"
1'-3"
"A"
3"
1½"
2"
6"
6"
2"
℄ BRG.
ASPHALTIC PLUG EXPANSION JOINT
(STUB WALL- EXPANSION END)
BEARING STRIPS (RUBBER BACKED UHMW-PE, ¼" THICK MIN., ⅜" MAX.) (SEE QUALIFIED PRODUCTS LIST, SECTION 520 FOR MATERIALS & BONDING AGENT) (ALL COSTS SUBSIDIARY TO ITEM 520.0201)
D
D/3 (CENTERED)
DECK HAUNCH STRIP: BOND RUBBER BACKED SIDE, FOR FULL LENGTH OF DECK STRIP SECTION, TO TOP OF DECK STRIP
BACKWALL STRIP: GRIND TOP OF BACKWALL TO A SMOOTH FLAT SURFACE AND BOND RUBBER BACKED SIDE OF 1'-3" WIDE SECTION TO TOP OF BACKWALL FOR THE ENTIRE LENGTH OF DECK AND BACKWALL CONTACT AREA
DECK STRIP: 1'-6" WIDE SECTION EMBEDDED INTO DECK HAUNCH FOR THE ENTIRE WIDTH OF DECK WITH RUBBER BACKED SIDE FACE UP
BEARING STRIP DETAIL
NOT TO SCALE
BRIDGE DETAIL
Date: 3/4/14

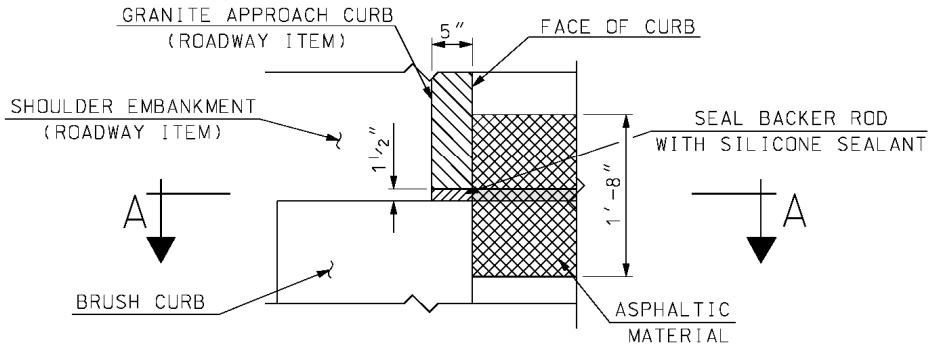

PLAN

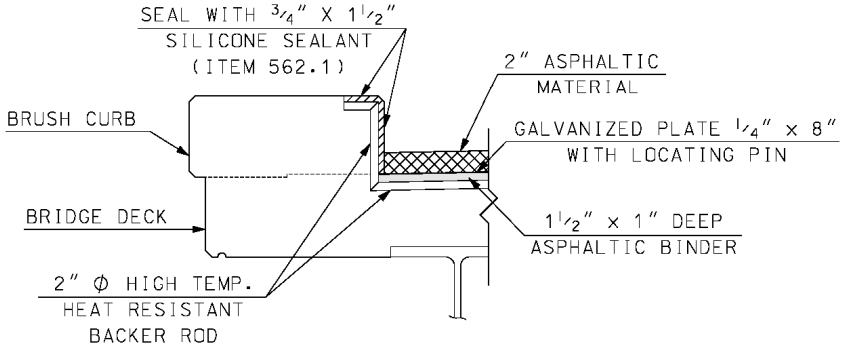

SECTION A–A

ASPHALTIC PLUG EXPANSION JOINT
ITEM 559.4 (CURB DETAIL)

BRIDGE DETAIL
Date: 1/14/14

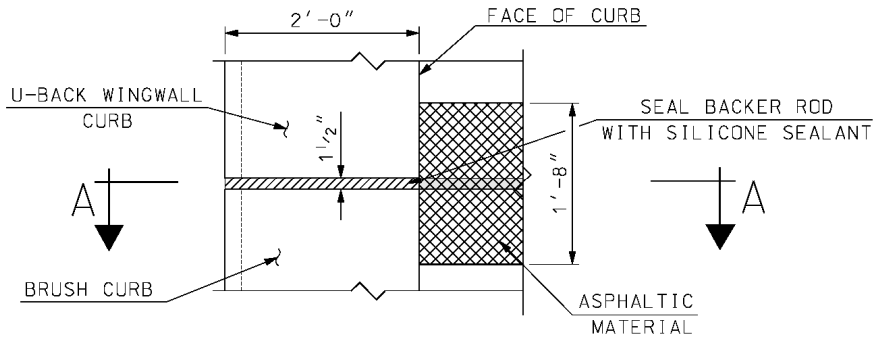

PLAN

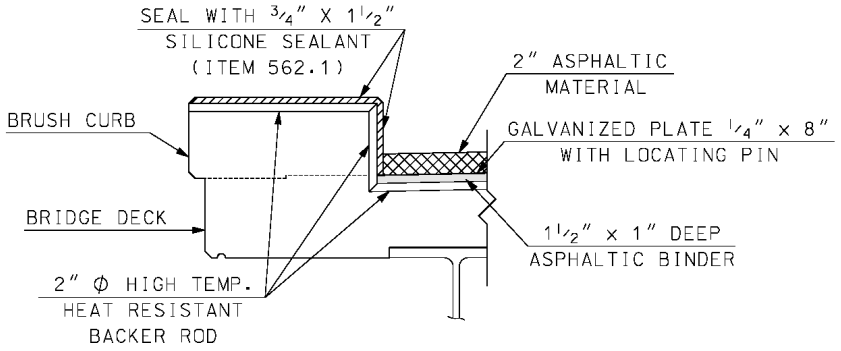

SECTION A-A

ASPHALTIC PLUG EXPANSION JOINT ITEM 559.4 (U-BACK WINGWALL CURB DETAIL)

BRIDGE DETAIL
Date: 1/14/14

Page intentionally left blank.

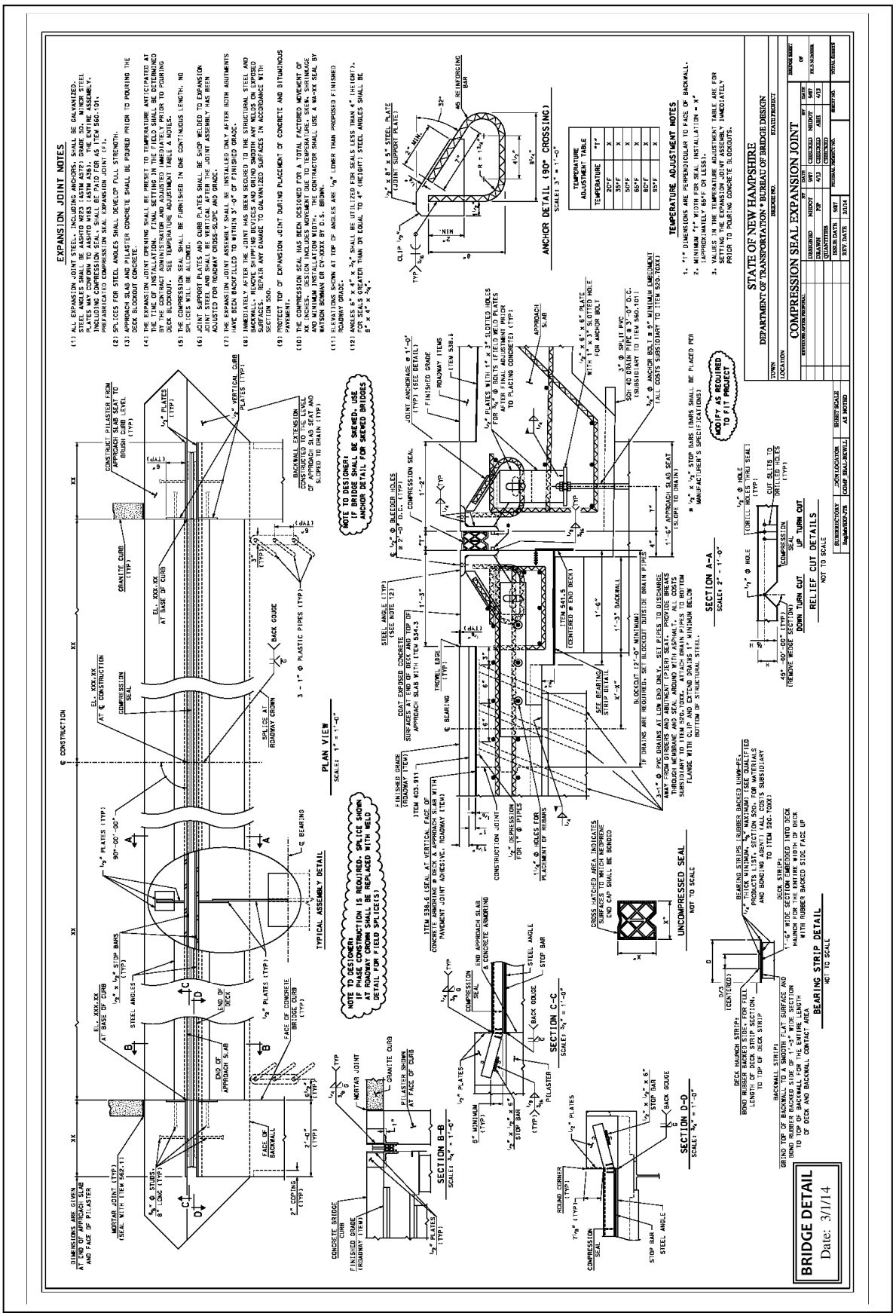
EXPANSION JOINT NOTES
(1) ALL EXPANSION JOINT STEEL, INCLUDING ANCHORS, SHALL BE GALVANIZED. STEEL ANGLES SHALL BE AASHTO M223 (ASTM A572) GRADE 50. MINOR STEEL PLATES MAY CONFORM TO AASHTO M183 (ASTM A36). THE ENTIRE ASSEMBLY, INCLUDING COMPRESSION SEAL, SHALL BE AS LISTED IN ITEM 560.151, PREFABRICATED COMPRESSION SEAL EXPANSION JOINT (F).
(2) SPLICES FOR STEEL ANGLES SHALL DEVELOP FULL STRENGTH.
(3) APPROACH SLAB AND PILASTER CONCRETE SHALL BE POURED PRIOR TO POURING THE DECK BLOCKOUT CONCRETE.
(4) THE EXPANSION JOINT OPENING SHALL BE PRESET TO TEMPERATURE ANTICIPATED AT THE TIME OF INSTALLATION. FINAL SETTING IN THE FIELD SHALL BE DETERMINED BY THE CONTRACT ADMINISTRATION AND ADJUSTED IMMEDIATELY PRIOR TO POURING DECK CONCRETE. SEE TEMPERATURE ADJUSTMENT NOTES AND TABLE.
(5) THE COMPRESSION SEAL SHALL BE FURNISHED IN ONE CONTINUOUS LENGTH. NO SPLICES WILL BE ALLOWED.
(6) JOINT SUPPORT PLATES AND CURB PLATES SHALL BE SHOP WELDED TO EXPANSION JOINT STEEL AND SHALL BE VERTICAL AFTER THE JOINT ASSEMBLY HAS BEEN ADJUSTED FOR ROADWAY CROSS-SLOPE AND GRADE.
(7) THE EXPANSION JOINT ASSEMBLY SHALL BE INSTALLED ONLY AFTER BOTH ABUTMENTS HAVE BEEN BACKFILLED TO WITHIN 3'-0" OF FINISHED GRADE.
(8) IMMEDIATELY AFTER THE JOINT HAS BEEN SECURED TO THE STRUCTURAL STEEL AND DECK REINFORCING, CONCRETE SHALL BE PLACED AROUND THE JOINT AS SPECIFIED. REPAIR ANY DAMAGE TO GALVANIZED SURFACES IN ACCORDANCE WITH SECTION 560.
(9) PROTECT TOP OF EXPANSION JOINT DURING PLACEMENT OF CONCRETE AND BITUMINOUS PAVEMENT.
(10) THE COMPRESSION SEAL HAS BEEN DESIGNED FOR A TOTAL FACTORED MOVEMENT OF ±50% OF THE TOTAL MOVEMENT RANGE SHOWN IN THE TEMPERATURE ADJUSTMENT TABLE AND MINIMUM INSTALLATION WIDTH. THE CONTRACTOR SHALL USE A WA-XX SEAL BY WATSON BOWMAN OR CV-XXXX BY D.S. BROWN.
(11) ELEVATIONS SHOWN AT TOP OF ANGLES ARE ⅛" LOWER THAN PROPOSED FINISHED ROADWAY GRADE.
(12) ANGLES 6" x 4" x ⅝" SHALL BE UTILIZED FOR SEALS LESS THAN 4" (HEIGHT). FOR SEALS GREATER THAN OR EQUAL TO 4" (HEIGHT) STEEL ANGLES SHALL BE 8" x 4" x ¾".
PLAN VIEW
SCALE: 1" = 1'-0"
TYPICAL ASSEMBLY DETAIL
NOTE TO DESIGNER: IF SKEW EXCEEDS 30° USE DETAIL FOR SKEWED BRIDGES
NOTE TO DESIGNER: IF BRIDGE SHALL BE SKEWED, USE ANCHOR DETAIL FOR SKEWED BRIDGES
ANCHOR DETAIL (90° CROSSING)
SCALE: 3" = 1'-0"
TEMPERATURE ADJUSTMENT TABLE
TEMPERATURE ADJUSTMENT NOTES
1. "T" DIMENSIONS ARE PERPENDICULAR TO FACE OF BACKWALL.
2. MINIMUM "T" WIDTH FOR SEAL INSTALLATION = X"
(APPROXIMATELY 65°F OR LESS).
3. VALUES IN THE TEMPERATURE ADJUSTMENT TABLE ARE FOR SETTING THE EXPANSION JOINT ASSEMBLY IMMEDIATELY PRIOR TO POURING CONCRETE BLOCKOUTS.
SECTION A-A
SECTION B-B
SECTION C-C
SECTION D-D
UNCOMPRESSED SEAL
NOT TO SCALE
RELIEF CUT DETAILS
NOT TO SCALE
BEARING STRIP DETAIL
NOT TO SCALE
STATE OF NEW HAMPSHIRE
DEPARTMENT OF TRANSPORTATION • BUREAU OF BRIDGE DESIGN
COMPRESSION SEAL EXPANSION JOINT
BRIDGE DETAIL
Date: 3/1/14

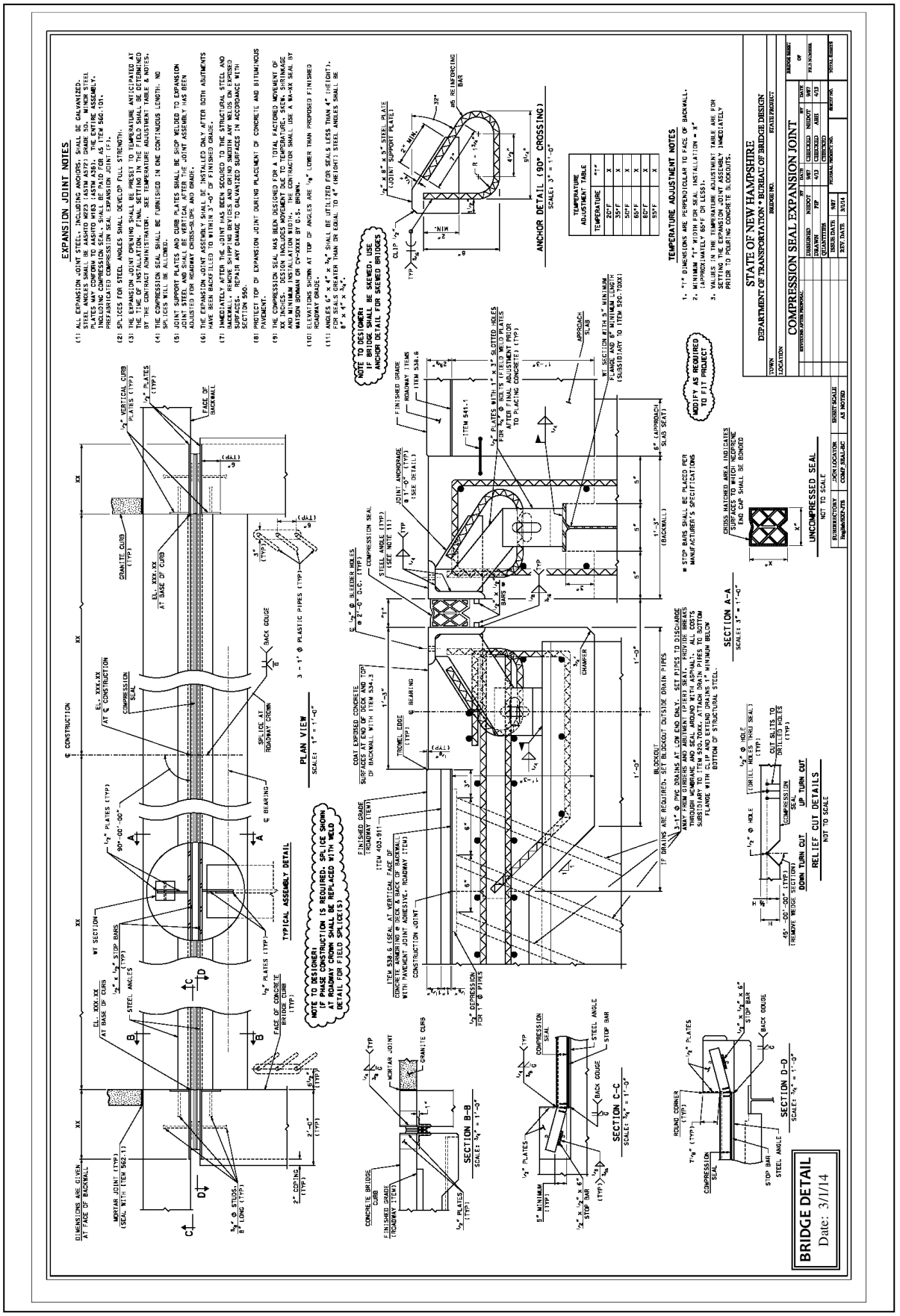
EXPANSION JOINT NOTES
(1) ALL EXPANSION JOINT STEEL, INCLUDING ANCHORS, SHALL BE GALVANIZED. STEEL ANGLES SHALL BE AASHTO M223 (ASTM A572) GRADE 50. MINOR STEEL PLATES MAY CONFORM TO AASHTO M183 (ASTM A36). THE ENTIRE ASSEMBLY, INCLUDING COMPRESSION SEAL, SHALL BE PAID FOR AS ITEM 560.101, PREFABRICATED EXPANSION JOINT SEAL, XXX" (XXX MM).
(2) SPLICES FOR STEEL ANGLES SHALL DEVELOP FULL STRENGTH.
(3) THE EXPANSION JOINT OPENING SHALL BE ADJUST TO TEMPERATURE ANTICIPATED AT THE TIME OF INSTALLATION. FINAL SETTING IN THE FIELD SHALL BE DETERMINED BY THE CONTRACT ADMINISTRATOR. SEE TEMPERATURE ADJUSTMENT TABLE & NOTES.
(4) THE COMPRESSION SEAL SHALL BE FURNISHED IN ONE CONTINUOUS LENGTH. NO SPLICES WILL BE ALLOWED.
(5) JOINT SUPPORT PLATES AND CURB PLATES SHALL BE SHOP WELDED TO EXPANSION JOINT STEEL AND SHALL BE IN PLACE AT THE TIME THE JOINT ASSEMBLY IS ADJUSTED AND SEALED. DRILL AND BOLT AT FIELD.
(6) THE EXPANSION JOINT ASSEMBLY SHALL BE INSTALLED ONLY AFTER BOTH ABUTMENTS HAVE BEEN BACKFILLED TO WITHIN 3'-0" OF FINISHED GRADE.
(7) IMMEDIATELY AFTER THE JOINT HAS BEEN SECURED TO THE STRUCTURAL STEEL AND BACKWALL, REMOVE SHIPPING DEVICES AND GRIND SMOOTH ANY WELDS ON EXPOSED SURFACES. REPAIR ANY DAMAGE TO GALVANIZED SURFACES IN ACCORDANCE WITH SECTION 560.
(8) PROTECT TOP OF EXPANSION JOINT DURING PLACEMENT OF CONCRETE AND BITUMINOUS PAVEMENT.
(9) THE COMPRESSION SEAL HAS BEEN DESIGNED FOR A TOTAL FACTORED MOVEMENT OF XX INCHES. DESIGN INCLUDES MOVEMENT DUE TO TEMPERATURE, SKEW, SHRINKAGE AND MINIMUM INSTALLATION WIDTH. THE CONTRACTOR SHALL USE A WA-XX SEAL BY WATSON BOWMAN OR D-XXXX BY V.S. BROWN.
(10) ELEVATIONS SHOWN ARE AT TOP OF ROADWAY GRADE.
(11) ANGLES 6" x 4" x 5/8" SHALL BE UTILIZED FOR SEALS LESS THAN 4" (HEIGHT). FOR SEALS GREATER THAN OR EQUAL TO 4" (HEIGHT) STEEL ANGLES SHALL BE 8" x 4" x 3/4".
PLAN VIEW
SCALE: 1" = 1'-0"
TYPICAL ASSEMBLY DETAIL
NOTE TO DESIGNER: IF PHASE CONSTRUCTION IS REQUIRED, SPLICE SHOWN AT ROADWAY CROWN SHALL BE REPLACED WITH WELD DETAIL FOR FIELD SPLICES.
NOTE TO DESIGNER: IF BRIDGE SHALL BE SKEWED, USE ANCHOR DETAIL FOR SKEWED BRIDGES
ANCHOR DETAIL (90° CROSSING)
SCALE: 3" = 1'-0"
TEMPERATURE ADJUSTMENT TABLE
TEMPERATURE ADJUSTMENT TABLE
TEMPERATURE "T"
20°F X
35°F X
50°F X
65°F X
80°F X
95°F X
TEMPERATURE ADJUSTMENT NOTES
1. "T" DIMENSIONS ARE PERPENDICULAR TO FACE OF BACKWALL.
2. MINIMUM "T" WIDTH FOR SEAL INSTALLATION = x"
(APPROXIMATELY 65°F OR LESS).
3. VALUES IN THE TEMPERATURE ADJUSTMENT TABLE ARE FOR SETTING THE EXPANSION JOINT ASSEMBLY IMMEDIATELY PRIOR TO POURING CONCRETE BLOCKOUTS.
MODIFY AS REQUIRED TO FIT PROJECT
UNCOMPRESSED SEAL
NOT TO SCALE
SECTION A-A
SCALE: 3" = 1'-0"
SECTION B-B
SCALE: 3/4" = 1'-0"
SECTION C-C
SCALE: 3/4" = 1'-0"
SECTION D-D
SCALE: 3/4" = 1'-0"
DOWN TURN CUT
RELIEF CUT DETAILS
NOT TO SCALE
UP TURN CUT
STATE OF NEW HAMPSHIRE
DEPARTMENT OF TRANSPORTATION • BUREAU OF BRIDGE DESIGN
COMPRESSION SEAL EXPANSION JOINT
BRIDGE DETAIL
Date: 3/1/14

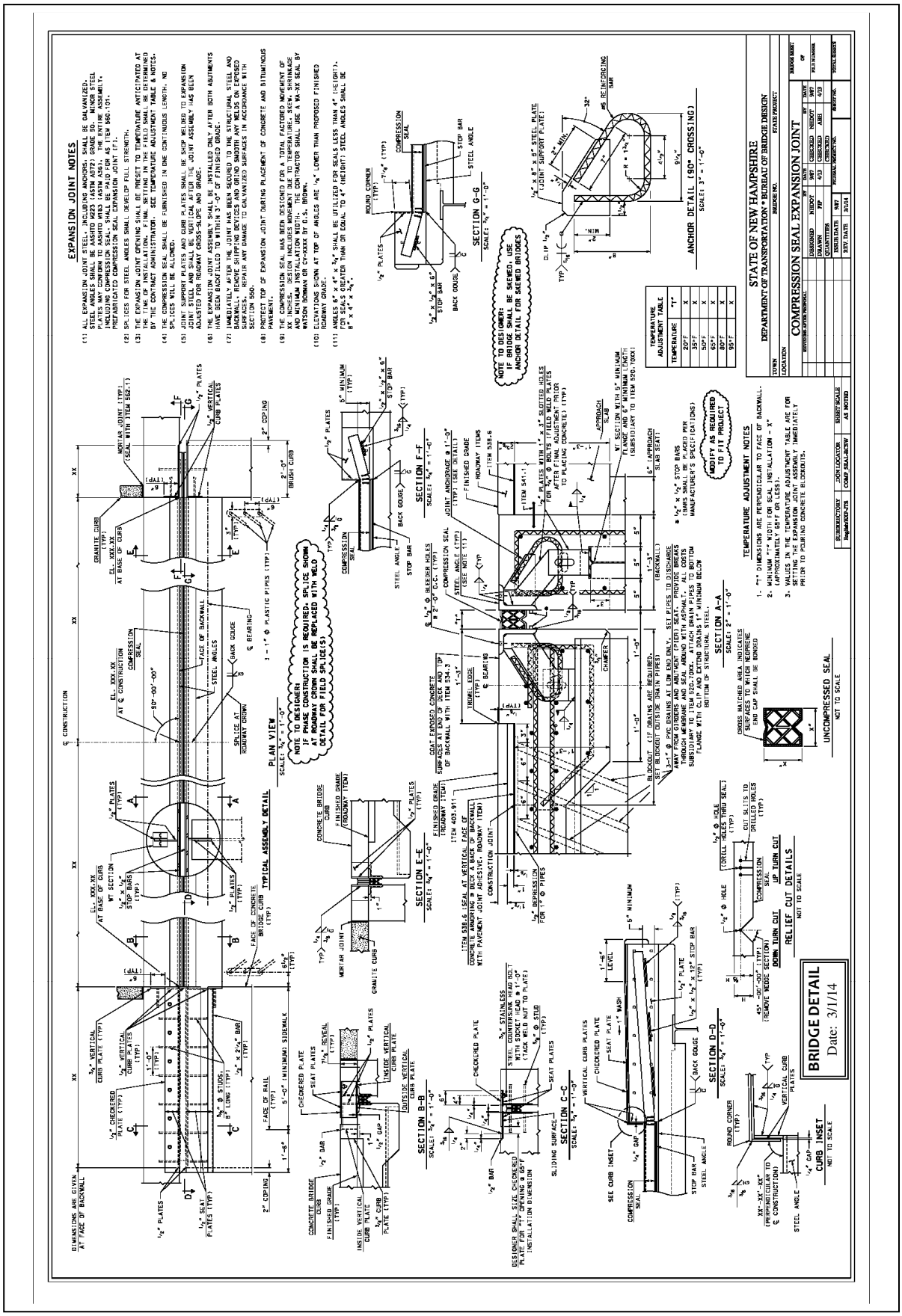
EXPANSION JOINT NOTES
(1) ALL EXPANSION JOINT STEEL, INCLUDING ANCHORS, SHALL BE GALVANIZED. STEEL ANGLES SHALL BE ASTM A709 GRADE 36. MINOR STEEL PLATES MAY CONFORM TO AASHTO M183 (ASTM A36). THE ENTIRE ASSEMBLY, INCLUDING COMPRESSION SEAL, SHALL BE PAID FOR AS ITEM 560.101, PREFABRICATED COMPRESSION SEAL EXPANSION JOINT (FT).
(2) SPLICES FOR STEEL ANGLES SHALL DEVELOP FULL STRENGTH.
(3) THE EXPANSION JOINT OPENING SHALL BE PRESET TO TEMPERATURE ANTICIPATED AT THE TIME THE STRUCTURAL STEEL IS ERECTED OR CONCRETE IS PLACED AS DIRECTED BY THE CONTRACT ADMINISTRATOR. SEE TEMPERATURE ADJUSTMENT TABLE & NOTES.
(4) THE COMPRESSION SEAL SHALL BE FURNISHED IN ONE CONTINUOUS LENGTH. NO SPLICES WILL BE ALLOWED.
(5) JOINT SUPPORT PLATES AND CURB PLATES SHALL BE SHOP WELDED TO EXPANSION JOINT STEEL AND SHALL BE VERTICAL AFTER THE JOINT ASSEMBLY HAS BEEN ADJUSTED FOR ROADWAY GRADES, SKEW AND CAMBER.
(6) FILLER MATERIAL SHALL NOT BE PLACED UNTIL THE JOINT HAS BEEN INSTALLED ONLY AFTER BOTH ABUTMENTS HAVE BEEN BACKFILLED TO WITHIN 2'-0" OF FINISHED GRADE.
(7) IMMEDIATELY AFTER THE JOINT HAS BEEN SECURED TO THE STRUCTURAL STEEL AND BACKWALL, REMOVE SHIPPING DEVICES AND GRIND SMOOTH ANY WELDS ON EXPOSED SURFACES. REPAIR ANY DAMAGE TO GALVANIZED SURFACES IN ACCORDANCE WITH SECTION 560.
(8) PROTECT TOP OF EXPANSION JOINT DURING PLACEMENT OF CONCRETE AND BITUMINOUS PAVING.
(9) THE COMPRESSION SEAL HAS BEEN DESIGNED FOR A TOTAL FACTORED MOVEMENT OF XX INCHES. DESIGN INCLUDES MOVEMENT DUE TO TEMPERATURE, SKEW, SHRINKAGE AND MINIMUM INSTALLATION WIDTH. THE CONTRACTOR SHALL USE A WA-XX SEAL BY WATSON BOWMAN OR CV-XXXX BY U.S. BRown.
(10) ELEVATIONS SHOWN AT TOP OF ANGLES ARE ¼" LOWER THAN PROPOSED FINISHED ROADWAY GRADES.
(11) ANGLES 6" x 4" x ½" SHALL BE UTILIZED FOR SEALS LESS THAN 4" HIGH(DIM'). FOR SEALS GREATER THAN OR EQUAL TO 4" (HEIGHT) STEEL ANGLES SHALL BE 8" x 4" x ¾".
PLAN VIEW
TYPICAL ASSEMBLY DETAIL
NOTE TO DESIGNER: IF PHASE CONSTRUCTION IS REQUIRED, SPLICE SHOWN MAY NEED TO BE SHIFTED OR SHALL BE REPLACED WITH WELD DETAIL FOR FIELD SPLICES.
SECTION A-A
SECTION B-B
SECTION C-C
SECTION D-D
SECTION E-E
SECTION F-F
SECTION G-G
ANCHOR DETAIL (90° CROSSING)
NOTE TO DESIGNER: IF BRIDGE SHALL BE SKEWED, USE ANCHOR DETAIL FOR SKEWED BRIDGES
CONCRETE SHALL NOT BE PLACED UNTIL THE JOINT IS SECURED TO THE STRUCTURAL STEEL.
TEMPERATURE ADJUSTMENT NOTES
1. "T" DIMENSIONS ARE PERPENDICULAR TO FACE OF BACKWALL.
2. MINIMUM "T" WIDTH FOR SEAL INSTALLATION = X" (APPROXIMATELY 68°F OR LESS).
3. VALUES IN THE TEMPERATURE ADJUSTMENT TABLE ARE FOR INFORMATION ONLY. THE CONTRACTOR SHALL VERIFY IMMEDIATELY PRIOR TO POURING CONCRETE BLOCKOUTS.
TEMPERATURE ADJUSTMENT TABLE
TEMPERATURE "T"
20°F X
35°F X
50°F X
65°F X
80°F X
95°F X
UNCOMPRESSED SEAL
NOT TO SCALE
CURB INSET
NOT TO SCALE
RELIEF CUT DETAILS
NOT TO SCALE
BRIDGE DETAIL
Date: 3/1/14
STATE OF NEW HAMPSHIRE
DEPARTMENT OF TRANSPORTATION - BUREAU OF BRIDGE DESIGN
COMPRESSION SEAL EXPANSION JOINT
TOWN
LOCATION
BRIDGE NO.
SYSTEM/PROJECT
DESIGNED
DRAWN
CHECKED
QUANTITIES
SUBMITTED
APPROVED
DATE
SHEET NO.
OF
N.H. DOT

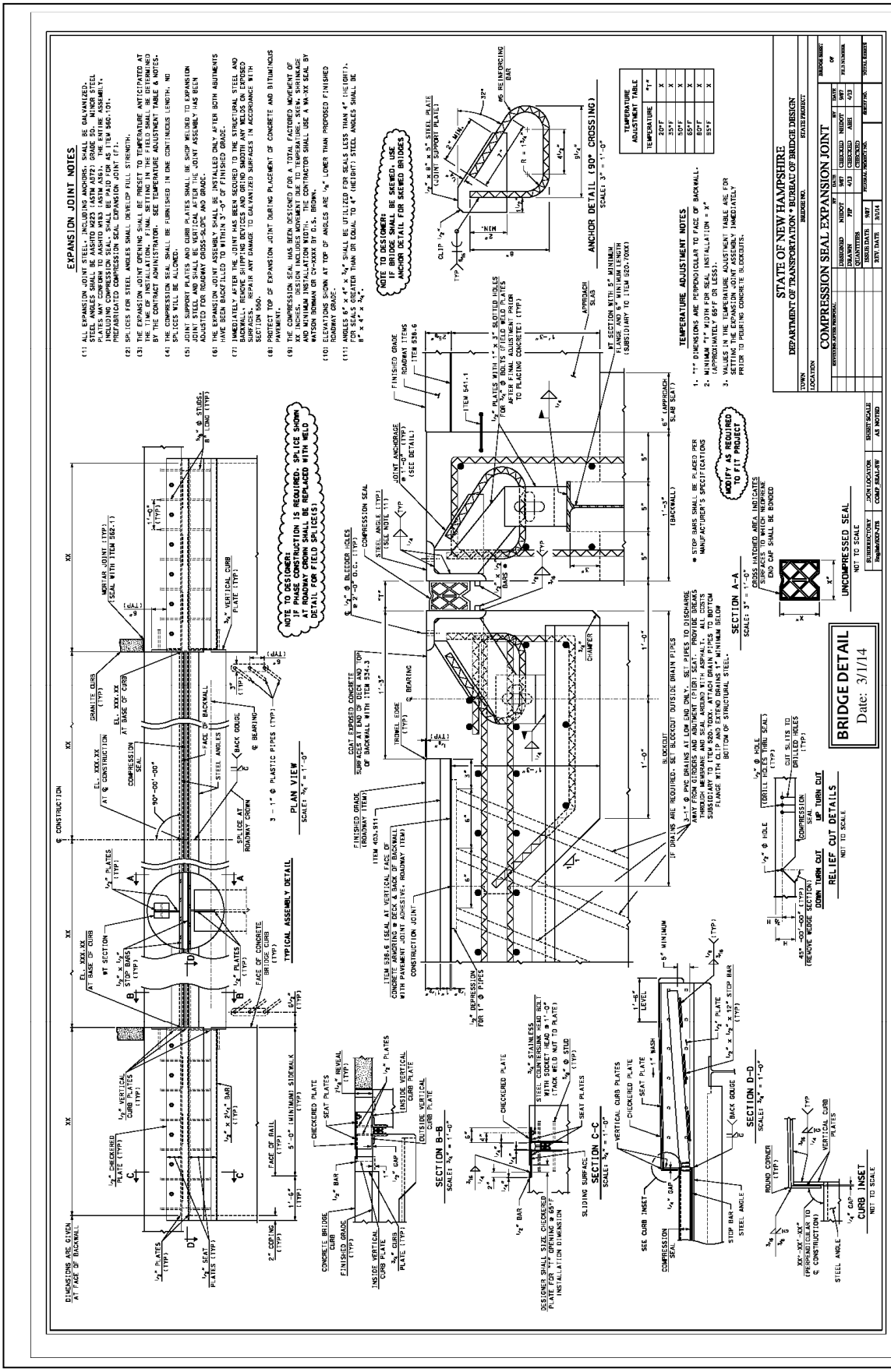
STATE OF NEW HAMPSHIRE
DEPARTMENT OF TRANSPORTATION • BUREAU OF BRIDGE DESIGN
COMPRESSION SEAL EXPANSION JOINT
EXPANSION JOINT NOTES
PLAN VIEW
TYPICAL ASSEMBLY DETAIL
ANCHOR DETAIL (90° CROSSING)
SECTION A-A
SECTION B-B
SECTION C-C
SECTION D-D
RELIEF CUT DETAILS
CURB INSET
TEMPERATURE ADJUSTMENT NOTES
UNCOMPRESSED SEAL
BRIDGE DETAIL
Date: 3/1/14

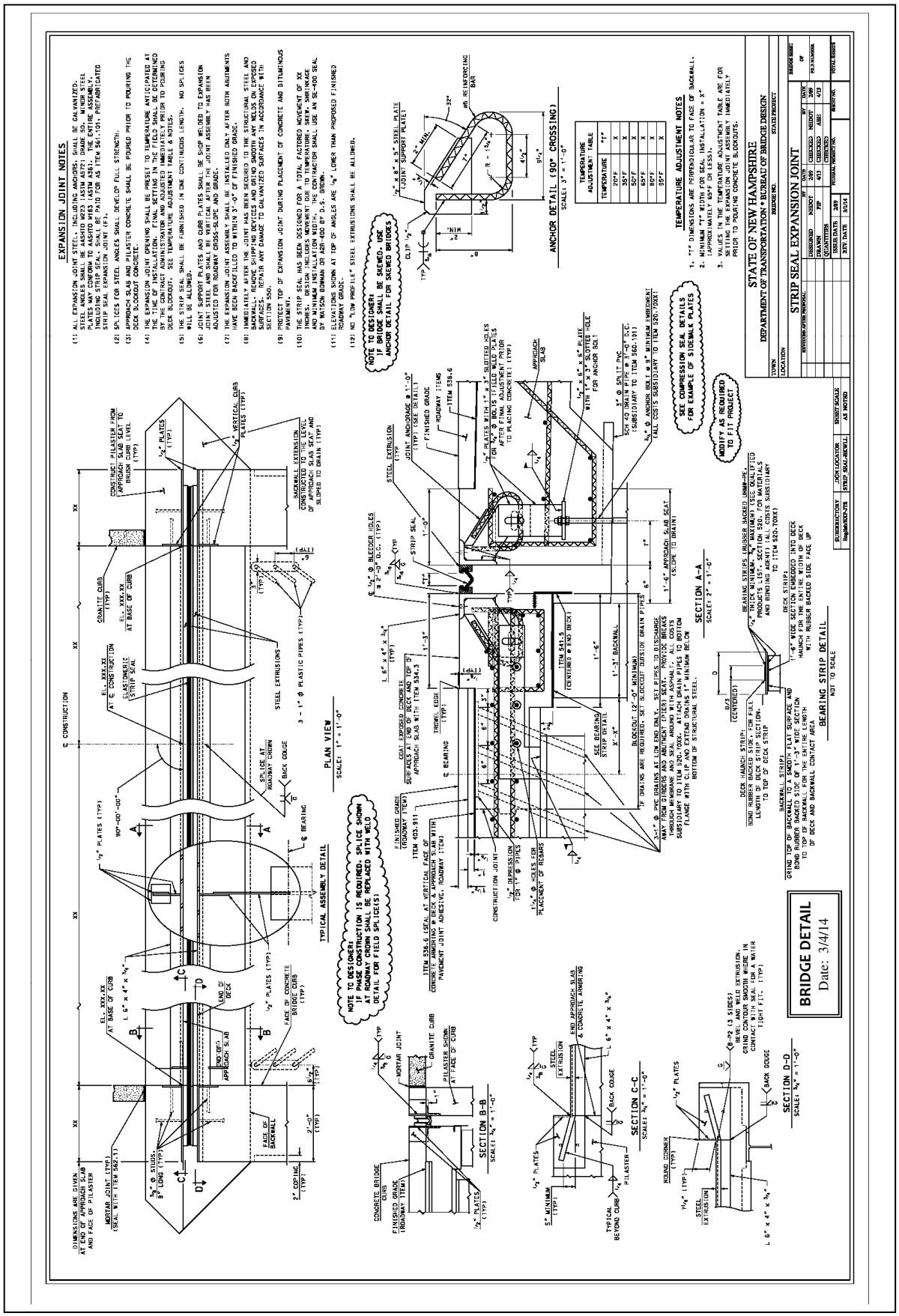
EXPANSION JOINT NOTES
(1) ALL EXPANSION JOINT STEEL, INCLUDING ANCHORS, SHALL BE GALVANIZED. PLATES MAY BE ASSEMBLED AND GALVANIZED AS ASSEMBLIES. ALL STEEL PLATES AND SHAPES SHALL BE ASTM A709, GRADE 36. STRIP SEAL ASSEMBLY, INCLUDING STRIP SEAL, SHALL BE PAID FOR AS ITEM 561.191, PREFABRICATED STRIP SEAL EXPANSION JOINT (F).
(2) SPLICES FOR STEEL ANGLES SHALL DEVELOP FULL STRENGTH.
(3) APPROACH SLAB AND PILASTER CONCRETE SHALL BE POURED PRIOR TO POURING THE DECK BLOCKOUT CONCRETE.
(4) THE EXPANSION JOINT OPENING SHALL BE PRESET TO TEMPERATURE ANTICIPATED AT THE TIME OF FINAL SETTING. FINAL SETTING SHALL BE PERFORMED BY THE CONTRACT ADMINISTRATOR AND ADJUSTED IMMEDIATELY PRIOR TO POURING DECK BLOCKOUT. SEE TEMPERATURE ADJUSTMENT TABLE & NOTES.
(5) THE STRIP SEAL SHALL BE FURNISHED IN ONE CONTINUOUS LENGTH. NO SPLICES WILL BE ALLOWED.
(6) JOINT SUPPORT PLATES AND CURB PLATES SHALL BE SHOP WELDED TO EXPANSION JOINT ASSEMBLY. THE ENTIRE EXPANSION JOINT ASSEMBLY HAS BEEN ADJUSTED FOR ROADWAY CROSS-SLOPE AND GRADE.
(7) THE EXPANSION JOINT ASSEMBLY SHALL BE INSTALLED ONLY AFTER BOTH ABUTMENTS HAVE BEEN BACKFILLED TO WITHIN 3'-0" OF FINISHED GRADE.
(8) IMMEDIATELY AFTER THE JOINT HAS BEEN SECURED TO THE STRUCTURAL STEEL AND BACKWALL, REMOVE SHIPPING DEVICES AND GRIND SMOOTH ANY WELDS ON EXPOSED SURFACES. REPAIR ANY DAMAGE TO GALVANIZED SURFACES IN ACCORDANCE WITH SECTION 560.
(9) PROTECT TOP OF EXPANSION JOINT DURING PLACEMENT OF CONCRETE AND BITUMINOUS PAVEMENT.
(10) THE STRIP SEAL HAS BEEN DESIGNED FOR A TOTAL FACTORED MOVEMENT OF XX INCHES. DESIGN INCLUDES MOVEMENT DUE TO TEMPERATURE, SKEW, SHRINKAGE AND MINIMUM INSTALLATION WIDTH. THE CONTRACTOR SHALL USE AN SE-400 SEAL OR APPROVED EQUAL AS PER SECTION 915.3.
(11) ELEVATIONS SHOWN AT TOP OF ANGLES ARE ¼" LOWER THAN PROPOSED FINISHED ROADWAY GRADE.
(12) NO ¾"ØM PROFILE² STEEL EXTRUSIONS SHALL BE ALLOWED.
PLAN VIEW
SCALE: 1" = 1'-0"
TYPICAL ASSEMBLY DETAIL
NOTE TO DESIGNER: IF PHASE CONSTRUCTION IS REQUIRED, SPLICE SHOWN AT ROADWAY CROWN SHALL BE REPLACED WITH WELD DETAIL FOR FIELD SPLICES)
NOTE TO DESIGNER: IF BRIDGE SHALL BE SKEWED, USE ANCHOR DETAIL FOR SKEWED BRIDGES
ANCHOR DETAIL (90° CROSSING)
SCALE: 3" = 1'-0"
TEMPERATURE ADJUSTMENT TABLE
TEMPERATURE ADJUSTMENT NOTES
1. "T" DIMENSIONS ARE PERPENDICULAR TO FACE OF BACKWALL.
2. MINIMUM INSTALLATION WIDTH FOR SEAL INSTALLATION = X"
3. VALUES IN THE TEMPERATURE ADJUSTMENT TABLE ARE FOR SETTING THE EXPANSION JOINT ASSEMBLY IMMEDIATELY PRIOR TO POURING CONCRETE BLOCKOUTS.
SEE COMPRESSION SEAL DETAILS FOR EXAMPLE OF SIDEWALK PLATES
NOTIFY AS REQUIRED TO FIT PROJECT
STATE OF NEW HAMPSHIRE
DEPARTMENT OF TRANSPORTATION • BUREAU OF BRIDGE DESIGN
STRIP SEAL EXPANSION JOINT
BEARING STRIP DETAIL
NOT TO SCALE
SECTION A-A
SCALE: 2" = 1'-0"
SECTION B-B
SCALE: ¾" = 1'-0"
SECTION C-C
SCALE: ¾" = 1'-0"
SECTION D-D
SCALE: ¾" = 1'-0"
BRIDGE DETAIL
Date: 3/4/14

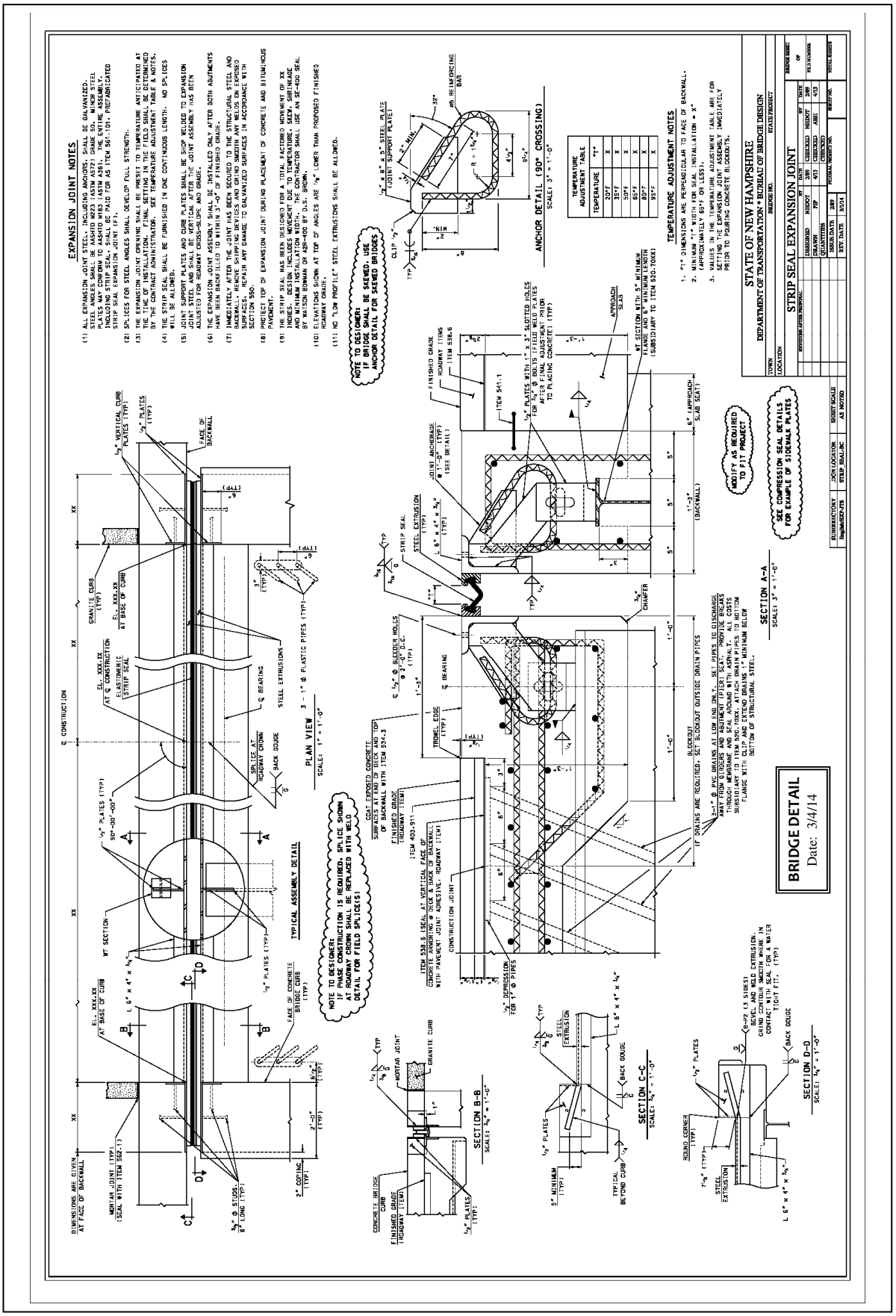
EXPANSION JOINT NOTES
(1) ALL EXPANSION JOINT STEEL, INCLUDING ANCHORS, SHALL BE GALVANIZED. STEEL ANGLES SHALL BE AASHTO M223 (ASTM A572) GRADE 50. MINOR STEEL PLATES MAY CONFORM TO AASHTO M183 (ASTM A36). THE ENTIRE ASSEMBLY, INCLUDING STEEL SLEEVES, SHALL BE PAID FOR AS ITEM 561.101, PREFABRICATED STRIP SEAL EXPANSION JOINT (FT).
(2) SPLICES FOR STEEL ANGLES SHALL DEVELOP FULL STRENGTH.
(3) THE EXPANSION JOINT OPENING SHALL BE PRESET TO TEMPERATURE ANTICIPATED AT THE TIME OF INSTALLATION. FINAL SETTING IN THE FIELD SHALL BE DETERMINED BY THE CONTRACT ADMINISTRATOR. SEE TEMPERATURE ADJUSTMENT TABLE & NOTES.
(4) THE STRIP SEAL SHALL BE FURNISHED IN ONE CONTINUOUS LENGTH. NO SPLICES WILL BE ALLOWED.
(5) JOINT SUPPORT PLATES AND CURB PLATES SHALL BE SHOP WELDED TO EXPANSION JOINT STEEL. ALL ANCHOR STUDS SHALL BE SHOP WELDED AFTER JOINT ASSEMBLY HAS BEEN ADJUSTED FOR ROADWAY CROSS-SLOPE AND GRADE.
(6) THE EXPANSION JOINT ASSEMBLY SHALL BE INSTALLED ONLY AFTER BOTH ABUTMENTS HAVE BEEN BACKFILLED TO WITHIN 3'-0" OF FINISHED GRADE.
(7) IMMEDIATELY AFTER THE JOINT HAS BEEN SECURED TO THE STRUCTURAL STEEL AND BACKWALL, REMOVE SHIPPING DEVICES AND GRIND SMOOTH ANY WELDS ON EXPOSED SURFACES. REPAIR ANY DAMAGE TO GALVANIZED SURFACES IN ACCORDANCE WITH SECTION 560.
(8) PROTECT TOP OF EXPANSION JOINT DURING PLACEMENT OF CONCRETE AND BITUMINOUS PAVEMENT.
(9) THE STRIP SEAL HAS BEEN DESIGNED FOR A TOTAL FACTORED MOVEMENT OF XX INCHES. DESIGN INCLUDES MOVEMENT DUE TO TEMPERATURE, SKEW, SHRINKAGE AND MINIMUM INSTALLATION WIDTH. THE CONTRACTOR SHALL USE AN SE-400 SEAL AS SHOWN ON THE PLANS UNLESS AN ALTERNATE IS APPROVED.
(10) ELEVATIONS SHOWN AT TOP OF ANGLES ARE 1/8" LOWER THAN PROPOSED FINISHED ROADWAY GRADE.
(11) NO "LOW PROFILE" STEEL EXTRUSIONS SHALL BE ALLOWED.
NOTE TO DESIGNER: IF BRIDGE SHALL BE SKEWED, USE ANCHOR DETAIL FOR SKEWED BRIDGES
NOTE TO DESIGNER: IF PHASE CONSTRUCTION IS REQUIRED, SPLICE SHOWN AT ROADWAY CENTERLINE SHALL BE REPLACED WITH WELD DETAIL FOR FIELD SPLICES!
PLAN VIEW
SCALE: 1" = 1'-0"
TYPICAL ASSEMBLY DETAIL
ANCHOR DETAIL (90° CROSSING)
SCALE: 3" = 1'-0"
SECTION A-A
SCALE: 3" = 1'-0"
SECTION B-B
SCALE: 3/4" = 1'-0"
SECTION C-C
SCALE: 1" = 1'-0"
SECTION D-D
SCALE: 1/4" = 1'-0"
TEMPERATURE ADJUSTMENT TABLE
TEMPERATURE ADJUSTMENT NOTES
1. "T" DIMENSIONS ARE PERPENDICULAR TO FACE OF BACKWALL.
2. MINIMUM INSTALLATION WIDTH = "X"
3. VALUES IN THE TEMPERATURE ADJUSTMENT TABLE ARE FOR SETTING THE EXPANSION JOINT ASSEMBLY IMMEDIATELY PRIOR TO POURING CONCRETE BLOCKOUTS.
STATE OF NEW HAMPSHIRE
DEPARTMENT OF TRANSPORTATION • BUREAU OF BRIDGE DESIGN
STRIP SEAL EXPANSION JOINT
BRIDGE DETAIL
Date: 3/4/14

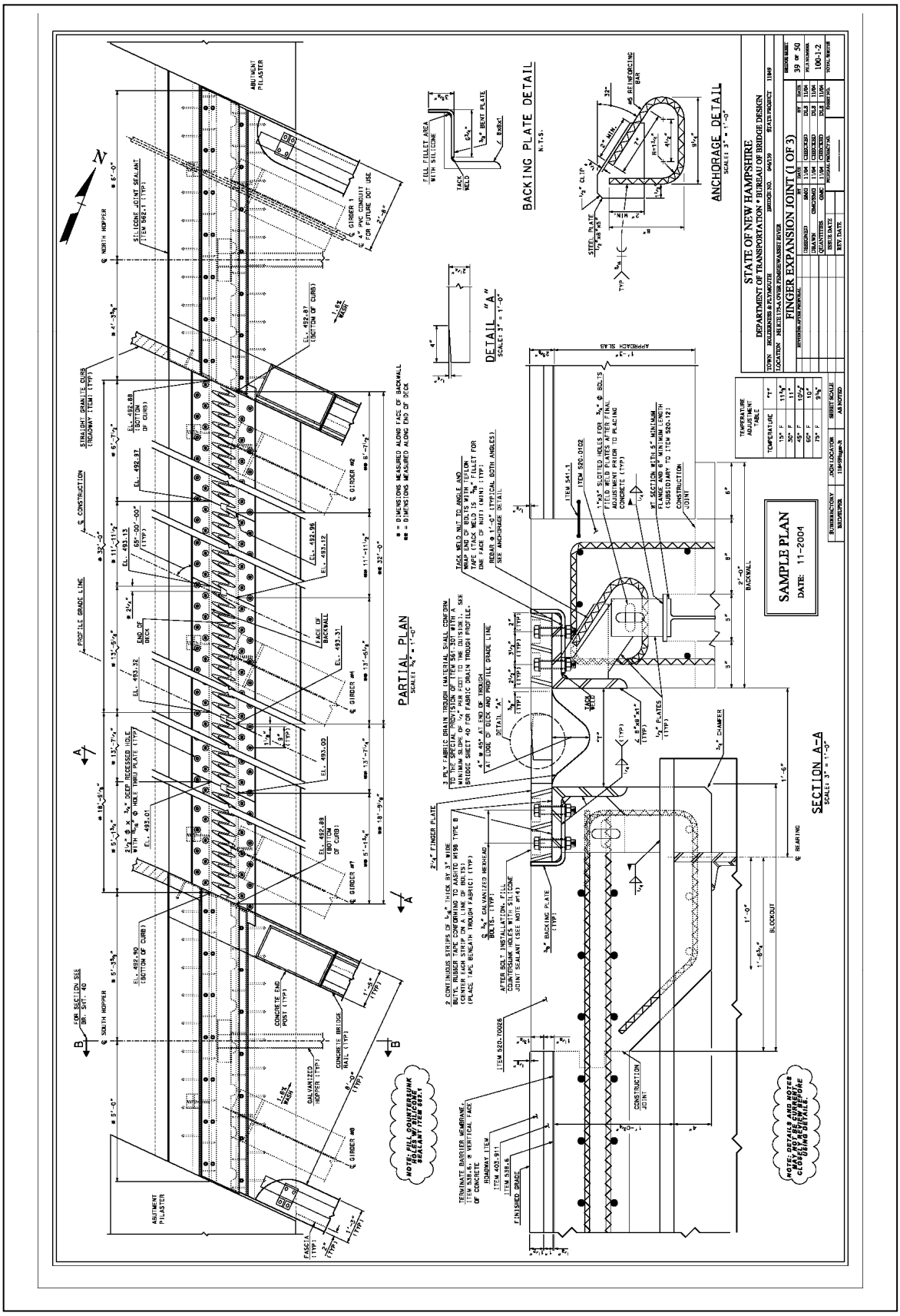
STATE OF NEW HAMPSHIRE
DEPARTMENT OF TRANSPORTATION * BUREAU OF BRIDGE DESIGN
FINGER EXPANSION JOINT (1 OF 3)
SAMPLE PLAN
DATE: 11-2004
PARTIAL PLAN
BACKING PLATE DETAIL
ANCHORAGE DETAIL
DETAIL "A"
SECTION A-A

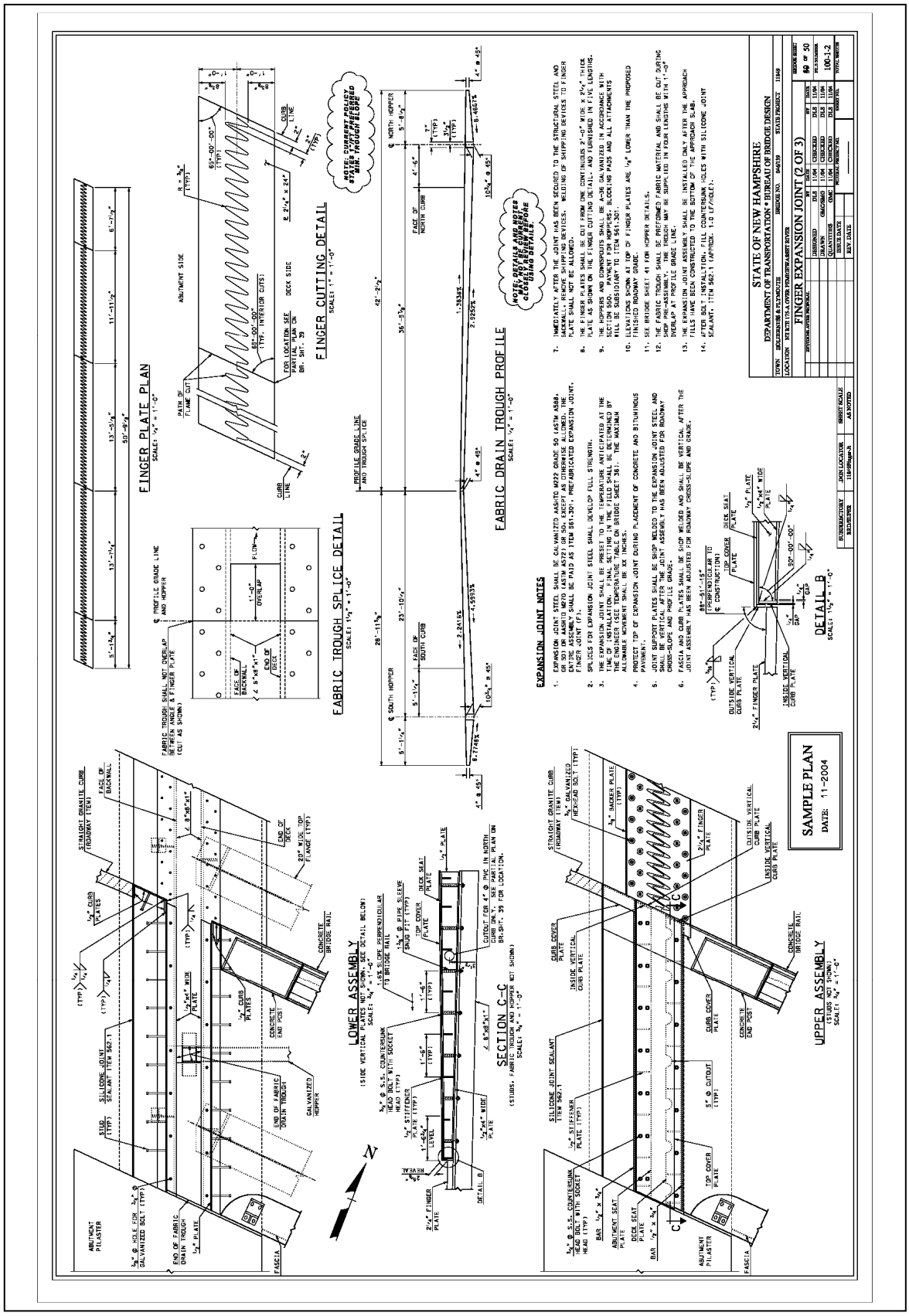
FINGER PLATE PLAN
FINGER CUTTING DETAIL
FABRIC TROUGH SPLICE DETAIL
FABRIC DRAIN TROUGH PROFILE
EXPANSION JOINT NOTES
DETAIL B
SECTION C-C
LOWER ASSEMBLY
UPPER ASSEMBLY
SAMPLE PLAN
DATE: 11-2004
STATE OF NEW HAMPSHIRE
DEPARTMENT OF TRANSPORTATION • BUREAU OF BRIDGE DESIGN
FINGER EXPANSION JOINT (2 OF 3)

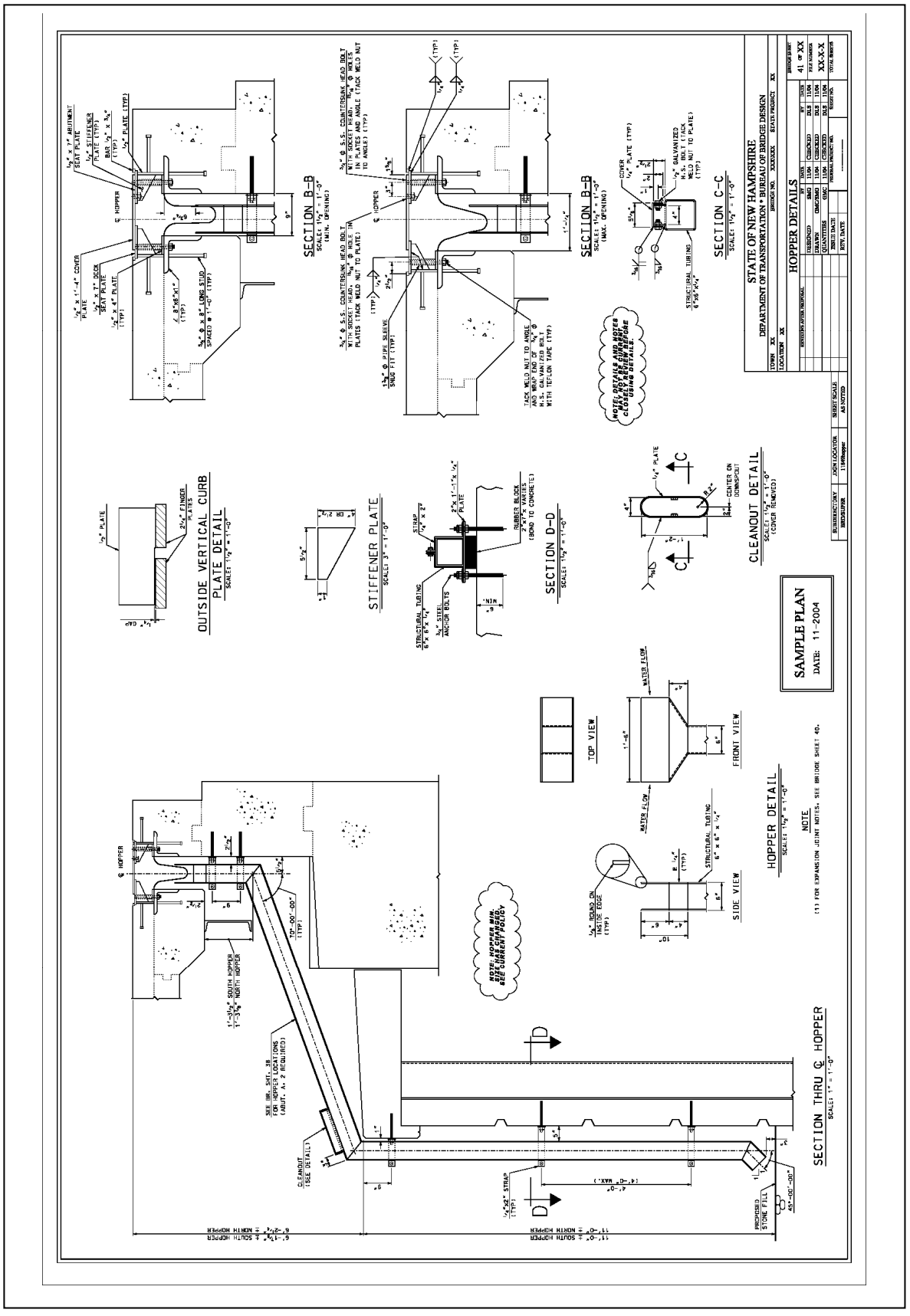
STATE OF NEW HAMPSHIRE
DEPARTMENT OF TRANSPORTATION • BUREAU OF BRIDGE DESIGN
HOPPER DETAILS
SAMPLE PLAN
DATE: 11-2004
SECTION B-B
SECTION C-C
SECTION D-D
OUTSIDE VERTICAL CURB
PLATE DETAIL
STIFFENER PLATE
CLEANOUT DETAIL
HOPPER DETAIL
SECTION THRU ℄ HOPPER
TOP VIEW
FRONT VIEW
SIDE VIEW
NOTE
(1) FOR EXPANSION JOINT NOTES, SEE BRIDGE SHEET 40.

Page intentionally left blank.

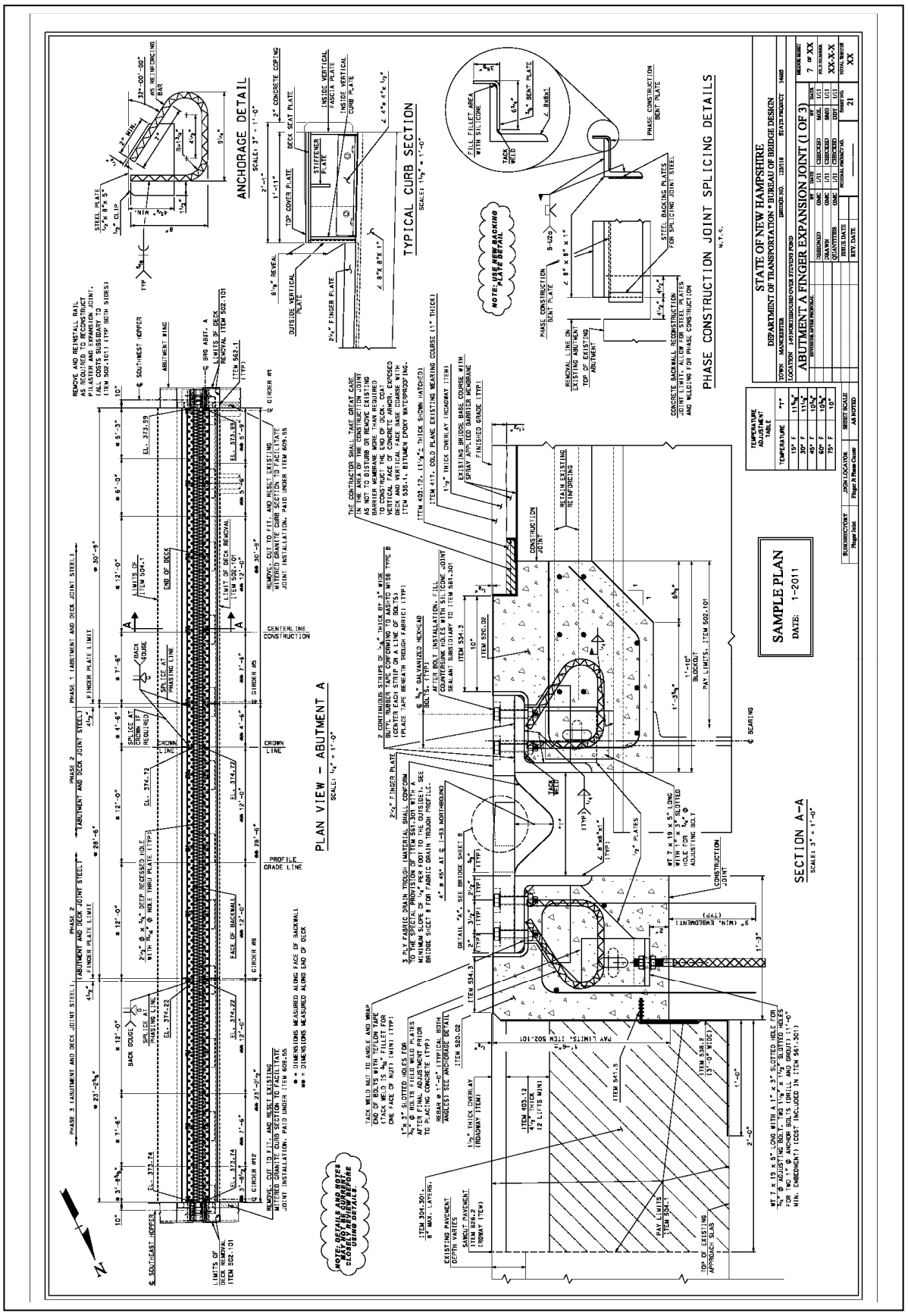
PLAN VIEW – ABUTMENT A
SCALE: 1/4" = 1'-0"
SECTION A-A
SCALES 3" = 1'-0"
ANCHORAGE DETAIL
TYPICAL CURB SECTION
SCALE: 1 1/2" = 1'-0"
PHASE CONSTRUCTION JOINT SPLICING DETAILS
N.T.S.
SAMPLE PLAN
DATE: 1-2011
STATE OF NEW HAMPSHIRE
DEPARTMENT OF TRANSPORTATION • BUREAU OF BRIDGE DESIGN
ABUTMENT A FINGER EXPANSION JOINT (1 OF 3)
TEMPERATURE ADJUSTMENT TABLE
PHASE 1 (ABUTMENT AND DECK JOINT STEEL)
PHASE 2 (ABUTMENT AND DECK JOINT STEEL)
PHASE 3 (ABUTMENT AND DECK JOINT STEEL)
NORTHBOUND
SOUTHBOUND
PROFILE GRADE LINE
CROWN LINE
CENTERLINE CONSTRUCTION
CONSTRUCTION JOINT
BACK EDGE
EXISTING PAVEMENT
TOP OF EXISTING APPROACH SLAB
PAY LIMITS
ITEM 541.1S
ITEM 538.2
ITEM 534.3
ITEM 520.02
ITEM 502.101
ITEM 403.12
ITEM 304.301
ITEM 534.1
ITEM 581.301
ITEM 535.1
ITEM 417.
ITEM 562.1
ITEM 504.1
ITEM 502.101
ITEM 609.35
ITEM 609.36
ITEM 609.37
ITEM 609.38
ITEM 609.39
ITEM 609.40
ITEM 609.41
ITEM 609.42
ITEM 609.43
ITEM 609.44
ITEM 609.45
ITEM 609.46
ITEM 609.47
ITEM 609.48
ITEM 609.49
ITEM 609.50
ITEM 609.51
ITEM 609.52
ITEM 609.53
ITEM 609.54
ITEM 609.55
ITEM 609.56
ITEM 609.57
ITEM 609.58
ITEM 609.59
ITEM 609.60
ITEM 609.61
ITEM 609.62
ITEM 609.63
ITEM 609.64
ITEM 609.65
ITEM 609.66
ITEM 609.67
ITEM 609.68
ITEM 609.69
ITEM 609.70
ITEM 609.71
ITEM 609.72
ITEM 609.73
ITEM 609.74
ITEM 609.75
ITEM 609.76
ITEM 609.77
ITEM 609.78
ITEM 609.79
ITEM 609.80
ITEM 609.81
ITEM 609.82
ITEM 609.83
ITEM 609.84
ITEM 609.85
ITEM 609.86
ITEM 609.87
ITEM 609.88
ITEM 609.89
ITEM 609.90
ITEM 609.91
ITEM 609.92
ITEM 609.93
ITEM 609.94
ITEM 609.95
ITEM 609.96
ITEM 609.97
ITEM 609.98
ITEM 609.99
ITEM 609.100
ITEM 609.101
ITEM 609.102
ITEM 609.103
ITEM 609.104
ITEM 609.105
ITEM 609.106
ITEM 609.107
ITEM 609.108
ITEM 609.109
ITEM 609.110
ITEM 609.111
ITEM 609.112
ITEM 609.113
ITEM 609.114
ITEM 609.115
ITEM 609.116
ITEM 609.117
ITEM 609.118
ITEM 609.119
ITEM 609.120
ITEM 609.121
ITEM 609.122
ITEM 609.123
ITEM 609.124
ITEM 609.125
ITEM 609.126
ITEM 609.127
ITEM 609.128
ITEM 609.129
ITEM 609.130
ITEM 609.131
ITEM 609.132
ITEM 609.133
ITEM 609.134
ITEM 609.135
ITEM 609.136
ITEM 609.137
ITEM 609.138
ITEM 609.139
ITEM 609.140
ITEM 609.141
ITEM 609.142
ITEM 609.143
ITEM 609.144
ITEM 609.145
ITEM 609.146
ITEM 609.147
ITEM 609.148
ITEM 609.149
ITEM 609.150
ITEM 609.151
ITEM 609.152
ITEM 609.153
ITEM 609.154
ITEM 609.155
ITEM 609.156
ITEM 609.157
ITEM 609.158
ITEM 609.159
ITEM 609.160
ITEM 609.161
ITEM 609.162
ITEM 609.163
ITEM 609.164
ITEM 609.165
ITEM 609.166
ITEM 609.167
ITEM 609.168
ITEM 609.169
ITEM 609.170
ITEM 609.171
ITEM 609.172
ITEM 609.173
ITEM 609.174
ITEM 609.175
ITEM 609.176
ITEM 609.177
ITEM 609.178
ITEM 609.179
ITEM 609.180
ITEM 609.181
ITEM 609.182
ITEM 609.183
ITEM 609.184
ITEM 609.185
ITEM 609.186
ITEM 609.187
ITEM 609.188
ITEM 609.189
ITEM 609.190
ITEM 609.191
ITEM 609.192
ITEM 609.193
ITEM 609.194
ITEM 609.195
ITEM 609.196
ITEM 609.197
ITEM 609.198
ITEM 609.199
ITEM 609.200
ITEM 609.201
ITEM 609.202
ITEM 609.203
ITEM 609.204
ITEM 609.205
ITEM 609.206
ITEM 609.207
ITEM 609.208
ITEM 609.209
ITEM 609.210
ITEM 609.211
ITEM 609.212
ITEM 609.213
ITEM 609.214
ITEM 609.215
ITEM 609.216
ITEM 609.217
ITEM 609.218
ITEM 609.219
ITEM 609.220
ITEM 609.221
ITEM 609.222
ITEM 609.223
ITEM 609.224
ITEM 609.225
ITEM 609.226
ITEM 609.227
ITEM 609.228
ITEM 609.229
ITEM 609.230
ITEM 609.231
ITEM 609.232
ITEM 609.233
ITEM 609.234
ITEM 609.235
ITEM 609.236
ITEM 609.237
ITEM 609.238
ITEM 609.239
ITEM 609.240
ITEM 609.241
ITEM 609.242
ITEM 609.243
ITEM 609.244
ITEM 609.245
ITEM 609.246
ITEM 609.247
ITEM 609.248
ITEM 609.249
ITEM 609.250
ITEM 609.251
ITEM 609.252
ITEM 609.253
ITEM 609.254
ITEM 609.255
ITEM 609.256
ITEM 609.257
ITEM 609.258
ITEM 609.259
ITEM 609.260
ITEM 609.261
ITEM 609.262
ITEM 609.263
ITEM 609.264
ITEM 609.265
ITEM 609.266
ITEM 609.267
ITEM 609.268
ITEM 609.269
ITEM 609.270
ITEM 609.271
ITEM 609.272
ITEM 609.273
ITEM 609.274
ITEM 609.275
ITEM 609.276
ITEM 609.277
ITEM 609.278
ITEM 609.279
ITEM 609.280
ITEM 609.281
ITEM 609.282
ITEM 609.283
ITEM 609.284
ITEM 609.285
ITEM 609.286
ITEM 609.287
ITEM 609.288
ITEM 609.289
ITEM 609.290
ITEM 609.291
ITEM 609.292
ITEM 609.293
ITEM 609.294
ITEM 609.295
ITEM 609.296
ITEM 609.297
ITEM 609.298
ITEM 609.299
ITEM 609.300
ITEM 609.301
ITEM 609.302
ITEM 609.303
ITEM 609.304
ITEM 609.305
ITEM 609.306
ITEM 609.307
ITEM 609.308
ITEM 609.309
ITEM 609.310
ITEM 609.311
ITEM 609.312
ITEM 609.313
ITEM 609.314
ITEM 609.315
ITEM 609.316
ITEM 609.317
ITEM 609.318
ITEM 609.319
ITEM 609.320
ITEM 609.321
ITEM 609.322
ITEM 609.323
ITEM 609.324
ITEM 609.325
ITEM 609.326
ITEM 609.327
ITEM 609.328
ITEM 609.329
ITEM 609.330
ITEM 609.331
ITEM 609.332
ITEM 609.333
ITEM 609.334
ITEM 609.335
ITEM 609.336
ITEM 609.337
ITEM 609.338
ITEM 609.339
ITEM 609.340
ITEM 609.341
ITEM 609.342
ITEM 609.343
ITEM 609.344
ITEM 609.345
ITEM 609.346
ITEM 609.347
ITEM 609.348
ITEM 609.349
ITEM 609.350
ITEM 609.351
ITEM 609.352
ITEM 609.353
ITEM 609.354
ITEM 609.355
ITEM 609.356
ITEM 609.357
ITEM 609.358
ITEM 609.359
ITEM 609.360
ITEM 609.361
ITEM 609.362
ITEM 609.363
ITEM 609.364
ITEM 609.365
ITEM 609.366
ITEM 609.367
ITEM 609.368
ITEM 609.369
ITEM 609.370
ITEM 609.371
ITEM 609.372
ITEM 609.373
ITEM 609.374
ITEM 609.375
ITEM 609.376
ITEM 609.377
ITEM 609.378
ITEM 609.379
ITEM 609.380
ITEM 609.381
ITEM 609.382
ITEM 609.383
ITEM 609.384
ITEM 609.385
ITEM 609.386
ITEM 609.387
ITEM 609.388
ITEM 609.389
ITEM 609.390
ITEM 609.391
ITEM 609.392
ITEM 609.393
ITEM 609.394
ITEM 609.395
ITEM 609.396
ITEM 609.397
ITEM 609.398
ITEM 609.399
ITEM 609.400
ITEM 609.401
ITEM 609.402
ITEM 609.403
ITEM 609.404
ITEM 609.405
ITEM 609.406
ITEM 609.407
ITEM 609.408
ITEM 609.409
ITEM 609.410
ITEM 609.411
ITEM 609.412
ITEM 609.413
ITEM 609.414
ITEM 609.415
ITEM 609.416
ITEM 609.417
ITEM 609.418
ITEM 609.419
ITEM 609.420
ITEM 609.421
ITEM 609.422
ITEM 609.423
ITEM 609.424
ITEM 609.425
ITEM 609.426
ITEM 609.427
ITEM 609.428
ITEM 609.429
ITEM 609.430
ITEM 609.431
ITEM 609.432
ITEM 609.433
ITEM 609.434
ITEM 609.435
ITEM 609.436
ITEM 609.437
ITEM 609.438
ITEM 609.439
ITEM 609.440
ITEM 609.441
ITEM 609.442
ITEM 609.443
ITEM 609.444
ITEM 609.445
ITEM 609.446
ITEM 609.447
ITEM 609.448
ITEM 609.449
ITEM 609.450
ITEM 609.451
ITEM 609.452
ITEM 609.453
ITEM 609.454
ITEM 609.455
ITEM 609.456
ITEM 609.457
ITEM 609.458
ITEM 609.459
ITEM 609.460
ITEM 609.461
ITEM 609.462
ITEM 609.463
ITEM 609.464
ITEM 609.465
ITEM 609.466
ITEM 609.467
ITEM 609.468
ITEM 609.469
ITEM 609.470
ITEM 609.471
ITEM 609.472
ITEM 609.473
ITEM 609.474
ITEM 609.475
ITEM 609.476
ITEM 609.477
ITEM 609.478
ITEM 609.479
ITEM 609.480
ITEM 609.481
ITEM 609.482
ITEM 609.483
ITEM 609.484
ITEM 609.485
ITEM 609.486
ITEM 609.487
ITEM 609.488
ITEM 609.489
ITEM 609.490
ITEM 609.491
ITEM 609.492
ITEM 609.493
ITEM 609.494
ITEM 609.495
ITEM 609.496
ITEM 609.497
ITEM 609.498
ITEM 609.499
ITEM 609.500
ITEM 609.501
ITEM 609.502
ITEM 609.503
ITEM 609.504
ITEM 609.505
ITEM 609.506
ITEM 609.507
ITEM 609.508
ITEM 609.509
ITEM 609.510
ITEM 609.511
ITEM 609.512
ITEM 609.513
ITEM 609.514
ITEM 609.515
ITEM 609.516
ITEM 609.517
ITEM 609.518
ITEM 609.519
ITEM 609.520
ITEM 609.521
ITEM 609.522
ITEM 609.523
ITEM 609.524
ITEM 609.525
ITEM 609.526
ITEM 609.527
ITEM 609.528
ITEM 609.529
ITEM 609.530
ITEM 609.531
ITEM 609.532
ITEM 609.533
ITEM 609.534
ITEM 609.535
ITEM 609.536
ITEM 609.537
ITEM 609.538
ITEM 609.539
ITEM 609.540
ITEM 609.541
ITEM 609.542
ITEM 609.543
ITEM 609.544
ITEM 609.545
ITEM 609.546
ITEM 609.547
ITEM 609.548
ITEM 609.549
ITEM 609.550
ITEM 609.551
ITEM 609.552
ITEM 609.553
ITEM 609.554
ITEM 609.555
ITEM 609.556
ITEM 609.557
ITEM 609.558
ITEM 609.559
ITEM 609.560
ITEM 609.561
ITEM 609.562
ITEM 609.563
ITEM 609.564
ITEM 609.565
ITEM 609.566
ITEM 609.567
ITEM 609.568
ITEM 609.569
ITEM 609.570
ITEM 609.571
ITEM 609.572
ITEM 609.573
ITEM 609.574
ITEM 609.575
ITEM 609.576
ITEM 609.577
ITEM 609.578
ITEM 609.579
ITEM 609.580
ITEM 609.581
ITEM 609.582
ITEM 609.583
ITEM 609.584
ITEM 609.585
ITEM 609.586
ITEM 609.587
ITEM 609.588
ITEM 609.589
ITEM 609.590
ITEM 609.591
ITEM 609.592
ITEM 609.593
ITEM 609.594
ITEM 609.595
ITEM 609.596
ITEM 609.597
ITEM 609.598
ITEM 609.599
ITEM 609.600
ITEM 609.601
ITEM 609.602
ITEM 609.603
ITEM 609.604
ITEM 609.605
ITEM 609.606
ITEM 609.607
ITEM 609.608
ITEM 609.609
ITEM 609.610
ITEM 609.611
ITEM 609.612
ITEM 609.613
ITEM 609.614
ITEM 609.615
ITEM 609.616
ITEM 609.617
ITEM 609.618
ITEM 609.619
ITEM 609.620
ITEM 609.621
ITEM 609.622
ITEM 609.623
ITEM 609.624
ITEM 609.625
ITEM 609.626
ITEM 609.627
ITEM 609.628
ITEM 609.629
ITEM 609.630
ITEM 609.631
ITEM 609.632
ITEM 609.633
ITEM 609.634
ITEM 609.635
ITEM 609.636
ITEM 609.637
ITEM 609.638
ITEM 609.639
ITEM 609.640
ITEM 609.641
ITEM 609.642
ITEM 609.643
ITEM 609.644
ITEM 609.645
ITEM 609.646
ITEM 609.647
ITEM 609.648
ITEM 609.649
ITEM 609.650
ITEM 609.651
ITEM 609.652
ITEM 609.653
ITEM 609.654
ITEM 609.655
ITEM 609.656
ITEM 609.657
ITEM 609.658
ITEM 609.659
ITEM 609.660
ITEM 609.661
ITEM 609.662
ITEM 609.663
ITEM 609.664
ITEM 609.665
ITEM 609.666
ITEM 609.667
ITEM 609.668
ITEM 609.669
ITEM 609.670
ITEM 609.671
ITEM 609.672
ITEM 609.673
ITEM 609.674
ITEM 609.675
ITEM 609.676
ITEM 609.677
ITEM 609.678
ITEM 609.679
ITEM 609.680
ITEM 609.681
ITEM 609.682
ITEM 609.683
ITEM 609.684
ITEM 609.685
ITEM 609.686
ITEM 609.687
ITEM 609.688
ITEM 609.689
ITEM 609.690
ITEM 609.691
ITEM 609.692
ITEM 609.693
ITEM 609.694
ITEM 609.695
ITEM 609.696
ITEM 609.697
ITEM 609.698
ITEM 609.699
ITEM 609.700
ITEM 609.701
ITEM 609.702
ITEM 609.703
ITEM 609.704
ITEM 609.705
ITEM 609.706
ITEM 609.707
ITEM 609.708
ITEM 609.709
ITEM 609.710
ITEM 609.711
ITEM 609.712
ITEM 609.713
ITEM 609.714
ITEM 609.715
ITEM 609.716
ITEM 609.717
ITEM 609.718
ITEM 609.719
ITEM 609.720
ITEM 609.721
ITEM 609.722
ITEM 609.723
ITEM 609.724
ITEM 609.725
ITEM 609.726
ITEM 609.727
ITEM 609.728
ITEM 609.729
ITEM 609.730
ITEM 609.731
ITEM 609.732
ITEM 609.733
ITEM 609.734
ITEM 609.735
ITEM 609.736
ITEM 609.737
ITEM 609.738
ITEM 609.739
ITEM 609.740
ITEM 609.741
ITEM 609.742
ITEM 609.743
ITEM 609.744
ITEM 609.745
ITEM 609.746
ITEM 609.747
ITEM 609.748
ITEM 609.749
ITEM 609.750
ITEM 609.751
ITEM 609.752
ITEM 609.753
ITEM 609.754
ITEM 609.755
ITEM 609.756
ITEM 609.757
ITEM 609.758
ITEM 609.759
ITEM 609.760
ITEM 609.761
ITEM 609.762
ITEM 609.763
ITEM 609.764
ITEM 609.765
ITEM 609.766
ITEM 609.767
ITEM 609.768
ITEM 609.769
ITEM 609.770
ITEM 609.771
ITEM 609.772
ITEM 609.773
ITEM 609.774
ITEM 609.775
ITEM 609.776
ITEM 609.777
ITEM 609.778
ITEM 609.779
ITEM 609.780
ITEM 609.781
ITEM 609.782
ITEM 609.783
ITEM 609.784
ITEM 609.785
ITEM 609.786
ITEM 609.787
ITEM 609.788
ITEM 609.789
ITEM 609.790
ITEM 609.791
ITEM 609.792
ITEM 609.793
ITEM 609.794
ITEM 609.795
ITEM 609.796
ITEM 609.797
ITEM 609.798
ITEM 609.799
ITEM 609.800
ITEM 609.801
ITEM 609.802
ITEM 609.803
ITEM 609.804
ITEM 609.805
ITEM 609.806
ITEM 609.807
ITEM 609.808
ITEM 609.809
ITEM 609.810
ITEM 609.811
ITEM 609.812
ITEM 609.813
ITEM 609.814
ITEM 609.815
ITEM 609.816
ITEM 609.817
ITEM 609.818
ITEM 609.819
ITEM 609.820
ITEM 609.821
ITEM 609.822
ITEM 609.823
ITEM 609.824
ITEM 609.825
ITEM 609.826
ITEM 609.827
ITEM 609.828
ITEM 609.829
ITEM 609.830
ITEM 609.831
ITEM 609.832
ITEM 609.833
ITEM 609.834
ITEM 609.835
ITEM 609.836
ITEM 609.837
ITEM 609.838
ITEM 609.839
ITEM 609.840
ITEM 609.841
ITEM 609.842
ITEM 609.843
ITEM 609.844
ITEM 609.845
ITEM 609.846
ITEM 609.847
ITEM 609.848
ITEM 609.849
ITEM 609.850
ITEM 609.851
ITEM 609.852
ITEM 609.853
ITEM 609.854
ITEM 609.855
ITEM 609.856
ITEM 609.857
ITEM 609.858
ITEM 609.859
ITEM 609.860
ITEM 609.861
ITEM 609.862
ITEM 609.863
ITEM 609.864
ITEM 609.865
ITEM 609.866
ITEM 609.867
ITEM 609.868
ITEM 609.869
ITEM 609.870
ITEM 609.871
ITEM 609.872
ITEM 609.873
ITEM 609.874
ITEM 609.875
ITEM 609.876
ITEM 609.877
ITEM 609.878
ITEM 609.879
ITEM 609.880
ITEM 609.881
ITEM 609.882
ITEM 609.883
ITEM 609.884
ITEM 609.885
ITEM 609.886
ITEM 609.887
ITEM 609.888
ITEM 609.889
ITEM 609.890
ITEM 609.891
ITEM 609.892
ITEM 609.893
ITEM 609.894
ITEM 609.895
ITEM 609.896
ITEM 609.897
ITEM 609.898
ITEM 609.899
ITEM 609.900
ITEM 609.901
ITEM 609.902
ITEM 609.903
ITEM 609.904
ITEM 609.905
ITEM 609.906
ITEM 609.907
ITEM 609.908
ITEM 609.909
ITEM 609.910
ITEM 609.911
ITEM 609.912
ITEM 609.913
ITEM 609.914
ITEM 609.915
ITEM 609.916
ITEM 609.917
ITEM 609.918
ITEM 609.919
ITEM 609.920
ITEM 609.921
ITEM 609.922
ITEM 609.923
ITEM 609.924
ITEM 609.925
ITEM 609.926
ITEM 609.927
ITEM 609.928
ITEM 609.929
ITEM 609.930
ITEM 609.931
ITEM 609.932
ITEM 609.933
ITEM 609.934
ITEM 609.935
ITEM 609.936
ITEM 609.937
ITEM 609.938
ITEM 609.939
ITEM 609.940
ITEM 609.941
ITEM 609.942
ITEM 609.943
ITEM 609.944
ITEM 609.945
ITEM 609.946
ITEM 609.947
ITEM 609.948
ITEM 609.949
ITEM 609.950
ITEM 609.951
ITEM 609.952
ITEM 609.953
ITEM 609.954
ITEM 609.955
ITEM 609.956
ITEM 609.957
ITEM 609.958
ITEM 609.959
ITEM 609.960
ITEM 609.961
ITEM 609.962
ITEM 609.963
ITEM 609.964
ITEM 609.965
ITEM 609.966
ITEM 609.967
ITEM 609.968
ITEM 609.969
ITEM 609.970
ITEM 609.971
ITEM 609.972
ITEM 609.973
ITEM 609.974
ITEM 609.975
ITEM 609.976
ITEM 609.977
ITEM 609.978
ITEM 609.979
ITEM 609.980
ITEM 609.981
ITEM 609.982
ITEM 609.983
ITEM 609.984
ITEM 609.985
ITEM 609.986
ITEM 609.987
ITEM 609.988
ITEM 609.989
ITEM 609.990
ITEM 609.991
ITEM 609.992
ITEM 609.993
ITEM 609.994
ITEM 609.995
ITEM 609.996
ITEM 609.997
ITEM 609.998
ITEM 609.999
ITEM 609.1000

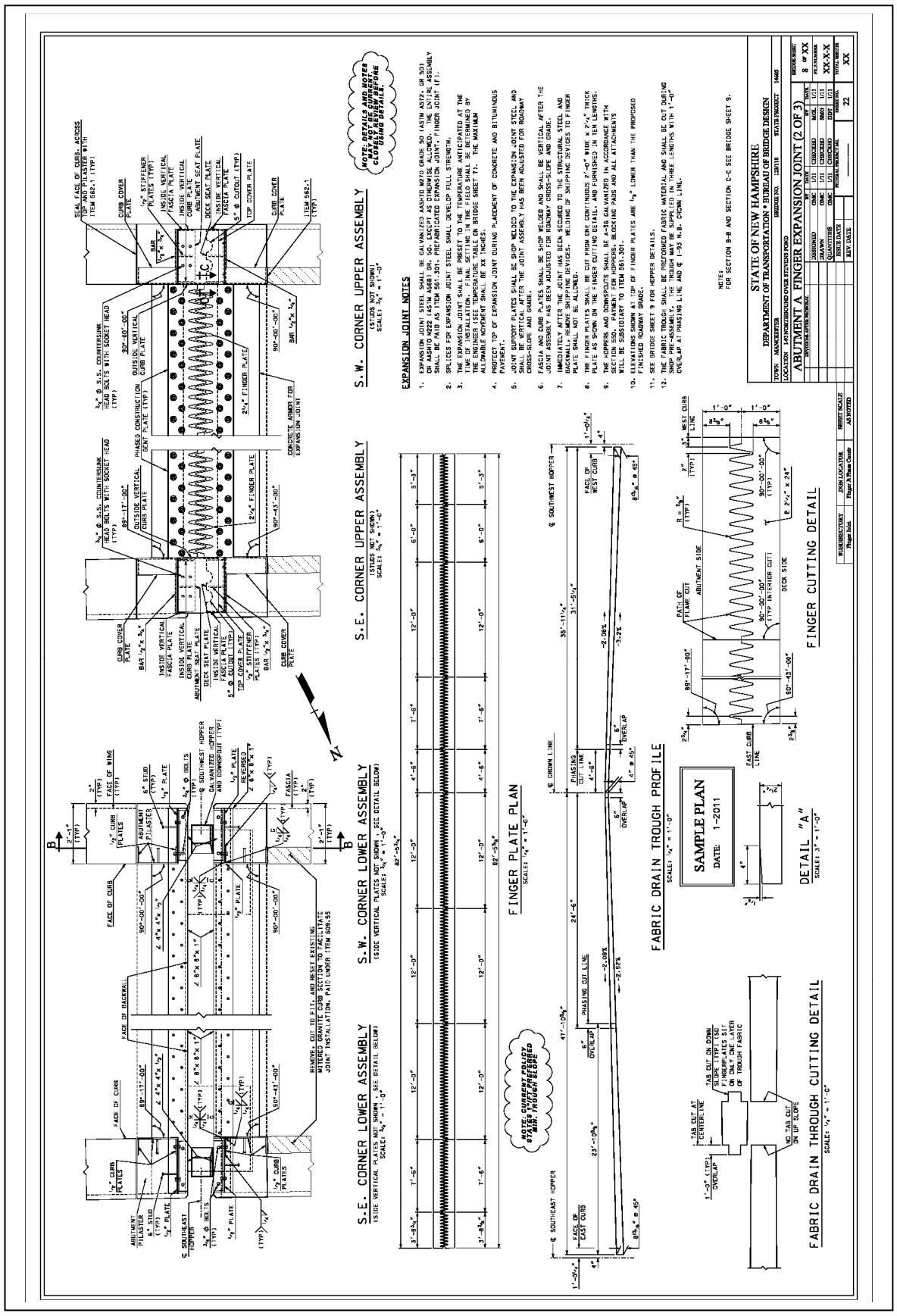
STATE OF NEW HAMPSHIRE
DEPARTMENT OF TRANSPORTATION • BUREAU OF BRIDGE DESIGN
ABUTMENT A FINGER EXPANSION JOINT (2 OF 3)
EXPANSION JOINT NOTES
1. EXPANSION JOINT STEEL SHALL BE GALVANIZED AASHTO M270 GRADE 50 (ASTM A572, GR 50) OR AASHTO M222 (ASTM A588) GR. 50. EXCEPT AS OTHERWISE ALLOWED. THE ENTIRE ASSEMBLY SHALL BE PAID AS ITEM 561.301, PREFABRICATED EXPANSION JOINT, FINGER JOINT (F).
2. SPLICES FOR EXPANSION JOINT STEEL SHALL DEVELOP FULL STRENGTH.
3. THE EXPANSION JOINT SHALL BE PRESET TO THE TEMPERATURE ANTICIPATED AT THE TIME OF INSTALLATION. FINAL SETTING IN THE FIELD SHALL BE DETERMINED BY THE ENGINEER. SEE SUPPLEMENTAL DETAILS ON BRIDGE SHEET 11. THE MAXIMUM ALLOWABLE MOVEMENT SHALL BE XX INCHES.
4. PROTECT TOP OF EXPANSION JOINT DURING PLACEMENT OF CONCRETE AND BITUMINOUS PAVEMENT.
5. JOINT SUPPORT PLATES SHALL BE SHOP WELDED TO THE EXPANSION JOINT STEEL AND SHALL BE VERTICAL AFTER THE JOINT ASSEMBLY HAS BEEN ADJUSTED FOR ROADWAY CROSS-SLOPE AND GRADE.
6. FASCIA AND BACKWALL PLATES SHALL BE SHOP WELDED AND SHALL BE VERTICAL AFTER THE JOINT ASSEMBLY HAS BEEN ADJUSTED FOR ROADWAY CROSS-SLOPE AND GRADE.
7. IMMEDIATELY AFTER THE JOINT HAS BEEN SECURED TO THE STRUCTURAL STEEL AND BACKWALL, REMOVE SHIPPING DEVICES. WELDING OF SHIPPING DEVICES TO FINGER PLATE SHALL NOT BE ALLOWED.
8. THE FINGER PLATES SHALL BE CUT FROM ONE CONTINUOUS 2'-0" WIDE x 2¼" THICK PLATE AS SHOWN ON THE FINGER CUTTING DETAIL, AND FURNISHED IN TEN LENGTHS.
9. THE HOPPERS AND DOWNSPOUTS SHALL BE A-36 GALVANIZED IN ACCORDANCE WITH SECTION 536 AND SHALL BE SUPPLIED WITH ANCHORS, NECESSARY PADS AND ALL ATTACHMENTS WILL BE SUBSIDIARY TO ITEM 561.301.
10. ELEVATIONS SHOWN AT TOP OF FINGER PLATES ARE ¼" LOWER THAN THE PROPOSED FINISHED ROADWAY GRADE.
11. SEE BRIDGE SHEET 9 FOR HOPPER DETAILS.
12. THE FABRIC TROUGH SHALL BE PREFORMED FABRIC MATERIAL AND SHALL BE CUT DURING SHOP PRE-ASSEMBLY. THE TROUGH MAY BE SUPPLIED IN THREE LENGTHS WITH 1'-0" OVERLAP AT PHASING LINE AND @ I-93 N.B. CROWN LINE.
NOTE:
FOR SECTION B-B AND SECTION C-C SEE BRIDGE SHEET 9.
S.E. CORNER LOWER ASSEMBLY
S.W. CORNER LOWER ASSEMBLY
S.E. CORNER UPPER ASSEMBLY
S.W. CORNER UPPER ASSEMBLY
FINGER PLATE PLAN
FABRIC DRAIN TROUGH PROFILE
SAMPLE PLAN
DATE: 1-2011
DETAIL "A"
FINGER CUTTING DETAIL
FABRIC DRAIN THROUGH CUTTING DETAIL
NOTE: DETAILS AND NOTES SHOWN ARE SCHEMATIC. CLOSELY REVIEW BEFORE USING DETAILS.
NOTE: CURRENT POLICY STATES NO FABRIC DRAIN THROUGH SLOPES
TOWN MANCHESTER
LOCATION I-93 NORTHBOUND OVER STEVENS POND
BRIDGE NO. 120018
STATE PROJECT 14605
DESIGNED MJC 3/11
DRAWN CMC 7/11
QUANTITIES CMC 7/11
ISSUE DATE
JOY DATE
BRIDGE SHEET 8 OF XX
NO. REVISIONS XX-XX-XX
CHECKED MJC 7/11
CHECKED MAO 7/11
CHECKED TDT 7/11
BRIDGE NO. XX
SHEET NO. 22

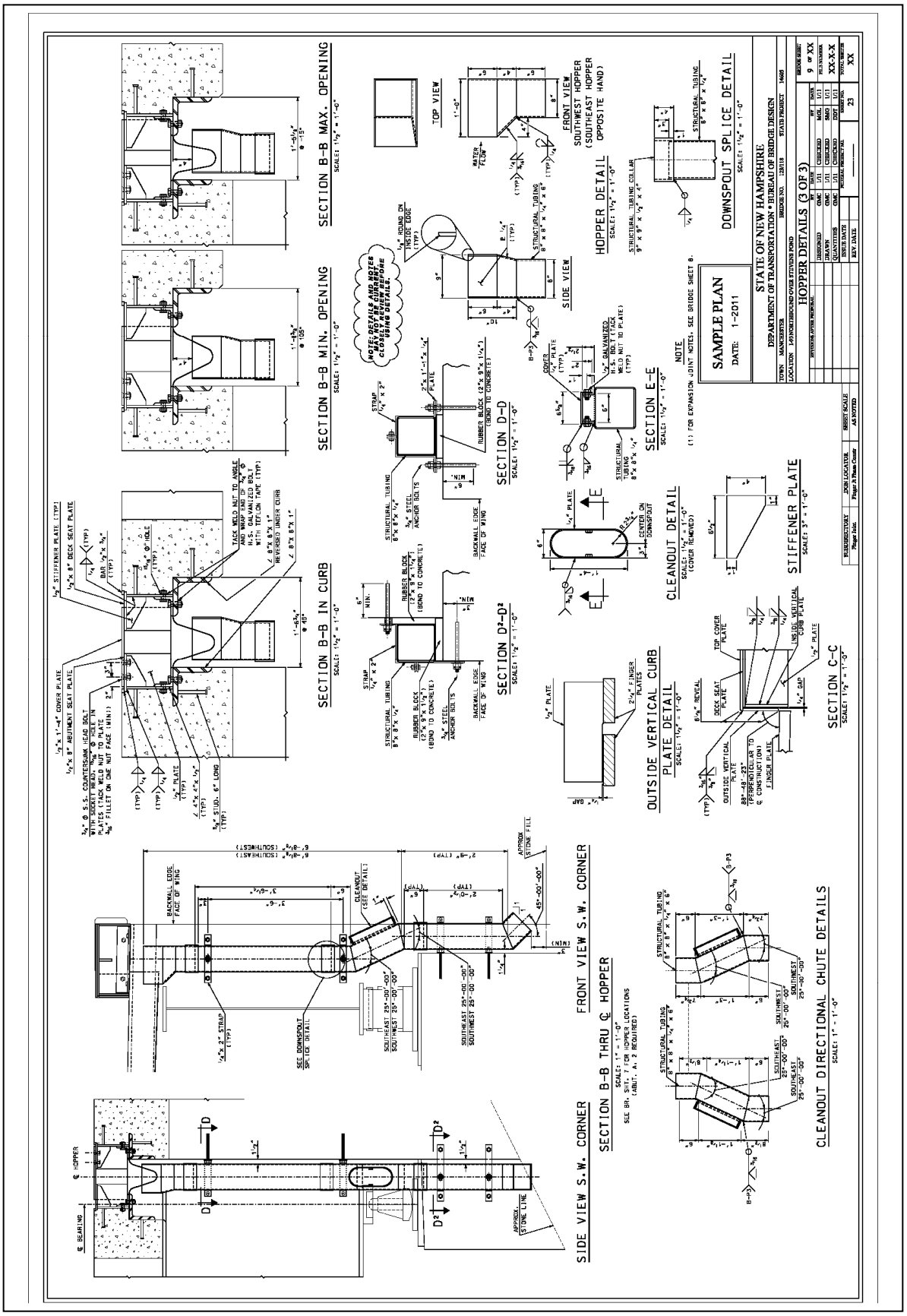
SECTION B-B MAX. OPENING
SECTION B-B MIN. OPENING
SECTION B-B IN CURB
SECTION D-D
SECTION D¹-D¹
SECTION D²-D²
SECTION E-E
HOPPER DETAIL
FRONT VIEW SOUTHWEST HOPPER (SOUTHEAST HAND)
TOP VIEW
SIDE VIEW
DOWNSPOUT SPLICE DETAIL
SAMPLE PLAN
DATE: 1-2011
NOTE
CLEANOUT DETAIL
OUTSIDE VERTICAL PLATE DETAIL
STIFFENER PLATE
SECTION C-C
SIDE VIEW S.W. CORNER
SECTION B-B THRU ℄ HOPPER
FRONT VIEW S.W. CORNER
CLEANOUT DIRECTIONAL CHUTE DETAILS
STATE OF NEW HAMPSHIRE
DEPARTMENT OF TRANSPORTATION • BUREAU OF BRIDGE DESIGN
HOPPER DETAILS (3 OF 3)

Page intentionally left blank.

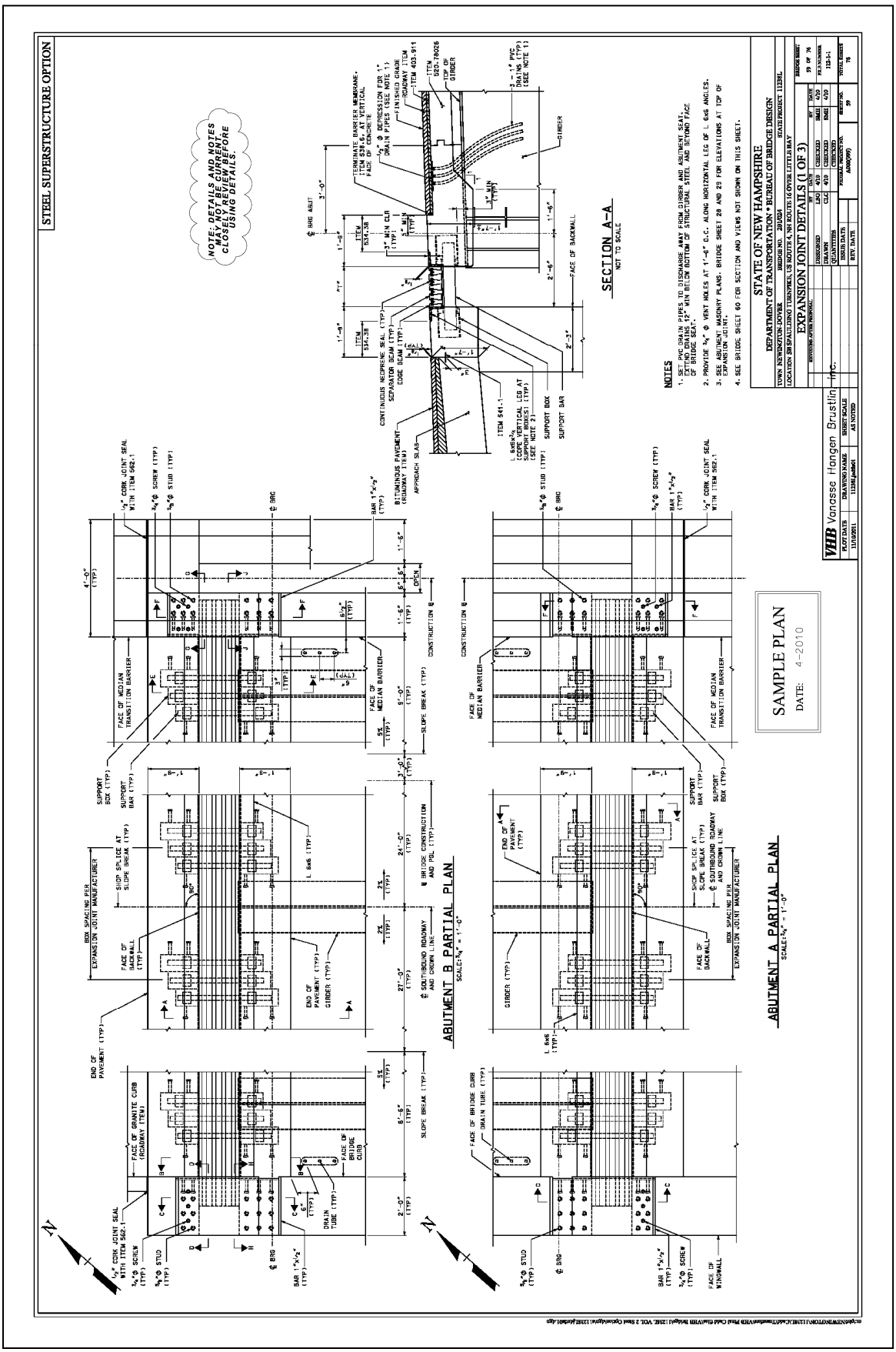
STEEL SUPERSTRUCTURE OPTION
NOTE: DETAILS AND NOTES MAY NOT BE CURRENT. CLOSELY REVIEW BEFORE USING DETAILS.
SECTION A-A
NOT TO SCALE
NOTES
1. SET PVC DRAIN PIPES TO DISCHARGE AWAY FROM GIRDER AND ABUTMENT SEAT. EXTEND DRAINS 12" MIN BELOW BOTTOM OF STRUCTURAL STEEL AND BEYOND FACE OF BRIDGE SEAT.
2. PROVIDE 3/4" Φ VENT HOLES AT 1'-6" O.C. ALONG HORIZONTAL LEG OF L 6x6 ANGLES.
3. SEE ABUTMENT MASONRY PLANS. BRIDGE SHEET 28 AND 29 FOR ELEVATIONS AT TOP OF EXPANSION JOINT.
4. SEE BRIDGE SHEET 60 FOR SECTION AND VIEWS NOT SHOWN ON THIS SHEET.
STATE OF NEW HAMPSHIRE
DEPARTMENT OF TRANSPORTATION • BUREAU OF BRIDGE DESIGN
EXPANSION JOINT DETAILS (1 OF 3)
VHB Vanasse Hangen Brustlin Inc.
SAMPLE PLAN
DATE: 4-2010
ABUTMENT B PARTIAL PLAN
ABUTMENT A PARTIAL PLAN

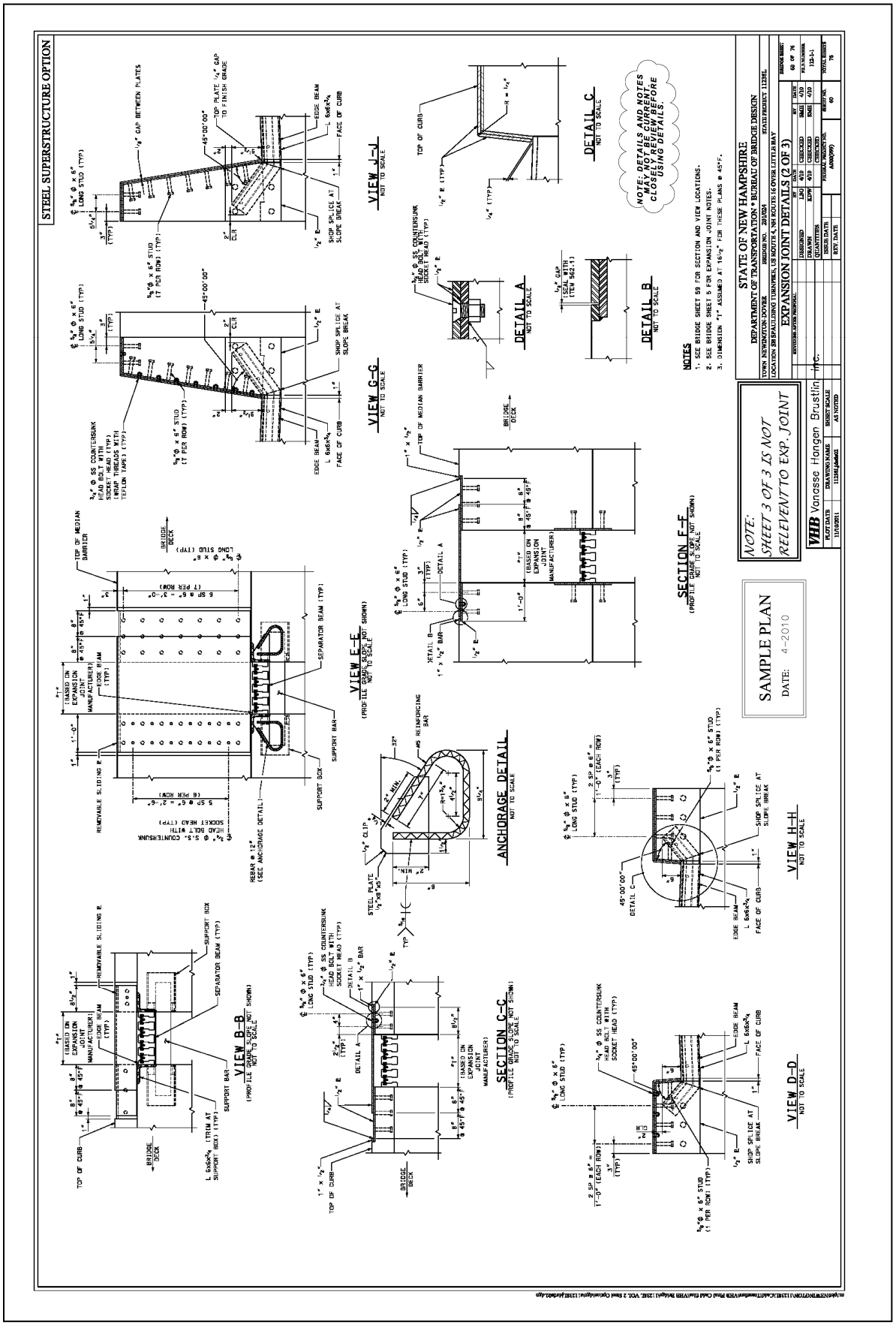
STEEL SUPERSTRUCTURE OPTION
STATE OF NEW HAMPSHIRE
DEPARTMENT OF TRANSPORTATION • BUREAU OF BRIDGE DESIGN
EXPANSION JOINT DETAILS (2 OF 3)
NOTES
1. SEE BRIDGE SHEET 59 FOR SECTION AND VIEW LOCATIONS.
2. SEE BRIDGE SHEET 5 FOR EXPANSION JOINT NOTES.
3. DIMENSION "I" ASSUMED AT 16½" FOR THESE PLANS @ 45°F.
NOTE: DETAILS AND NOTES MAY NOT BE CORRECT. CLOSELY REVIEW BEFORE USING DETAILS.
NOTE: SHEET 3 OF 3 IS NOT RELEVENT TO EXP. JOINT
SAMPLE PLAN
DATE: 4-2010
VHB Vanasse Hangen Brustlin, Inc.

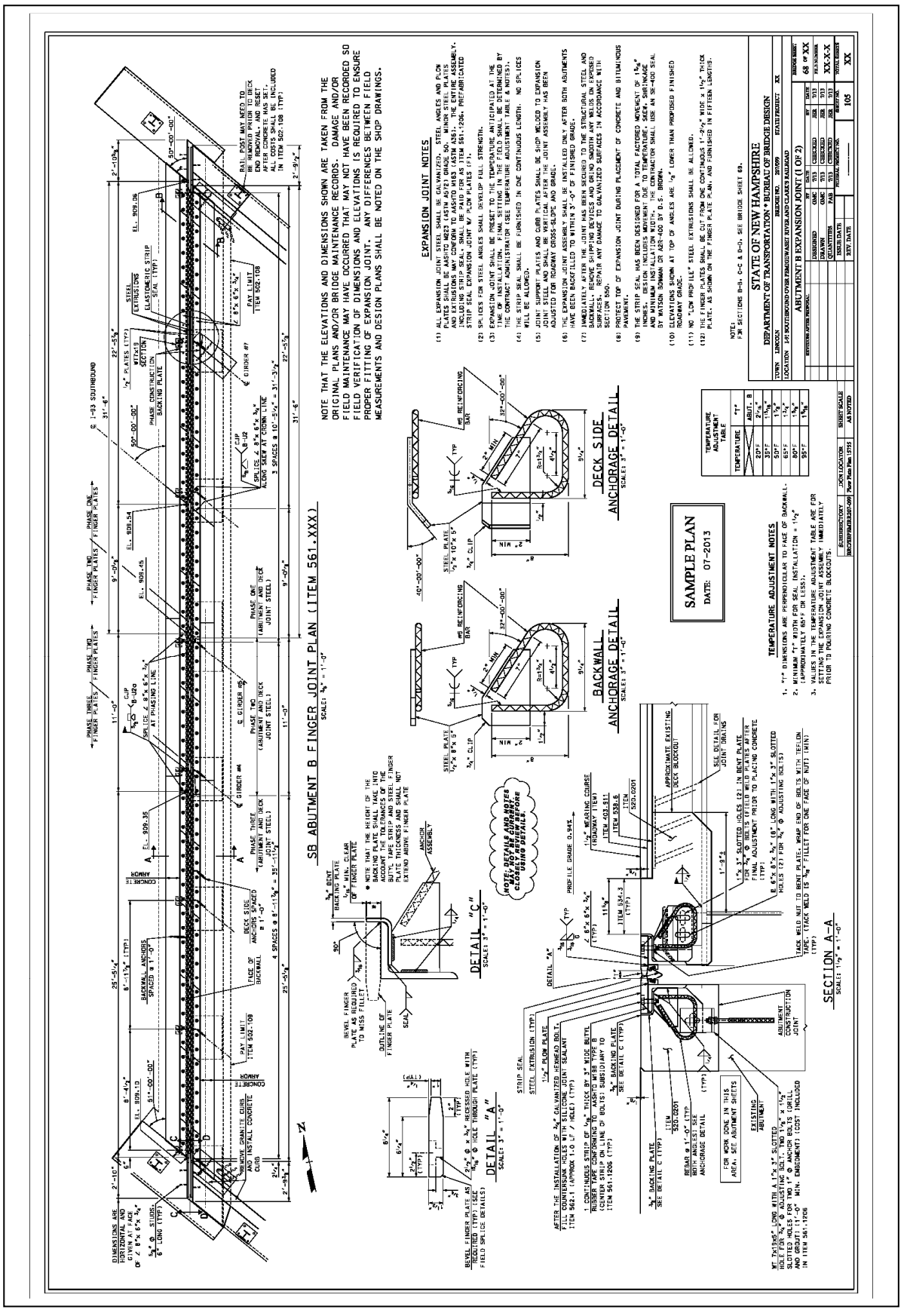
SB ABUTMENT B FINGER JOINT PLAN (ITEM 561.XXX)
SCALE: 3/8" = 1'-0"
NOTE THAT THE ELEVATIONS AND DIMENSIONS SHOWN ARE TAKEN FROM THE ORIGINAL PLANS AND/OR BRIDGE MAINTENANCE RECORDS. DAMAGE AND/OR FIELD MAINTENANCE MAY HAVE OCCURRED THAT MAY NOT HAVE BEEN RECORDED SO FIELD VERIFICATION OF DIMENSIONS AND ELEVATIONS IS REQUIRED TO ENSURE PROPER FITTING OF EXPANSION JOINT. ANY DIFFERENCES BETWEEN FIELD MEASUREMENTS AND DESIGN PLANS SHALL BE NOTED ON THE SHOP DRAWINGS.
EXPANSION JOINT NOTES
(1) ALL EXPANSION JOINT STEEL SHALL BE GALVANIZED. STEEL ANGLES AND PLATES SHALL BE AASHTO M223 (ASTM A572) GRADE 50. MINOR STEEL PLATES AND EXTRUSIONS MAY CONFORM TO AASHTO M183 (ASTM A36). THE ENTIRE ASSEMBLY, INCLUDING STRIP SEAL, SHALL BE PAID FOR AS ITEM 561.1206, PREFABRICATED EXPANSION JOINT, 6" MAX. MVT.
(2) SR-105 FOR STEEL ANGLES SHALL DEVELOP FULL STRENGTH.
(3) EXPANSION JOINT SHALL BE PRESET TO THE TEMPERATURE ANTICIPATED AT THE TIME OF INSTALLATION. FINAL SETTING IN THE FIELD SHALL BE DETERMINED BY THE CONTRACT ADMINISTRATOR (SEE TEMPERATURE ADJUSTMENT TABLE & NOTES).
(4) THE STRIP SEAL SHALL BE FURNISHED IN ONE CONTINUOUS LENGTH. NO SPLICES WILL BE ALLOWED.
(5) JOINT SUPPORT PLATES AND CURB PLATES SHALL BE SHOP WELDED TO EXPANSION JOINT STEEL AND SHALL BE SHOP WELDED TO THE JOINT ASSEMBLY HAS BEEN ADJUSTED TO THE PROPER WIDTH AND ELEVATION.
(6) THE EXPANSION JOINT ASSEMBLY SHALL BE INSTALLED ONLY AFTER BOTH ABUTMENTS HAVE BEEN BACKFILLED TO WITHIN 3'-0" OF FINISHED GRADE.
(7) IMMEDIATELY AFTER THE JOINT HAS BEEN SECURED TO THE STRUCTURAL STEEL AND BACKWALL, REMOVE SHIPPING DEVICES AND GRIND SMOOTH ANY WELDS ON EXPOSED SURFACES. REPAIR ANY DAMAGE TO GALVANIZED SURFACES IN ACCORDANCE WITH SECTION 506.
(8) PROTECT TOP OF EXPANSION JOINT DURING PLACEMENT OF CONCRETE AND BITUMINOUS PAVEMENT.
(9) THE STRIP SEAL HAS BEEN DESIGNED FOR A TOTAL FACTORED MOVEMENT OF 1 3/8" INCHES. DESIGN INCLUDES MOVEMENT DUE TO TEMPERATURE, SKEW, SHRINKAGE AND MINIMUM INSTALLATION WIDTH. THE CONTRACTOR SHALL USE AN SE-400 SEAL BY WATSON BOWMAN OR APPROVED EQUAL.
(10) ELEVATIONS SHOWN AT TOP OF ANGLES ARE 1/8" LOWER THAN PROPOSED FINISHED ROADWAY GRADE.
(11) NO "LOW PROFILE" STEEL EXTRUSIONS SHALL BE ALLOWED.
(12) THE FINGER PLATES SHALL BE CUT FROM ONE CONTINUOUS 1'-2 1/2" WIDE x 1 1/2" THICK PLATE, AS SHOWN ON THE FINGER PLATE PLAN, AND FURNISHED IN FIFTEEN LENGTHS.
NOTE:
FOR SECTIONS B-B, C-C & D-D, SEE BRIDGE SHEET 69.
TEMPERATURE ADJUSTMENT NOTES
1. "T" DIMENSIONS ARE PERPENDICULAR TO FACE OF BACKWALL.
2. MINIMUM "T" WIDTH FOR SEAL INSTALLATION = 1 1/2"
(APPROXIMATELY 60°F OR LESS).
3. VALUES IN THE TEMPERATURE ADJUSTMENT TABLE ARE FOR SETTING THE EXPANSION JOINT ASSEMBLY IMMEDIATELY PRIOR TO POURING CONCRETE BLOCKOUTS
TEMPERATURE ADJUSTMENT TABLE
TEMPERATURE | "T" ABUT. B
20°F | 2 1/16"
35°F | 1 5/16"
50°F | 1 1/16"
65°F | 13/16"
80°F | 1/16"
95°F | 1/16"
SAMPLE PLAN
DATE: 07-2013
STATE OF NEW HAMPSHIRE
DEPARTMENT OF TRANSPORTATION • BUREAU OF BRIDGE DESIGN
ABUTMENT B EXPANSION JOINT (1 OF 2)
68 OF XX
XX-XX-X
105
XX

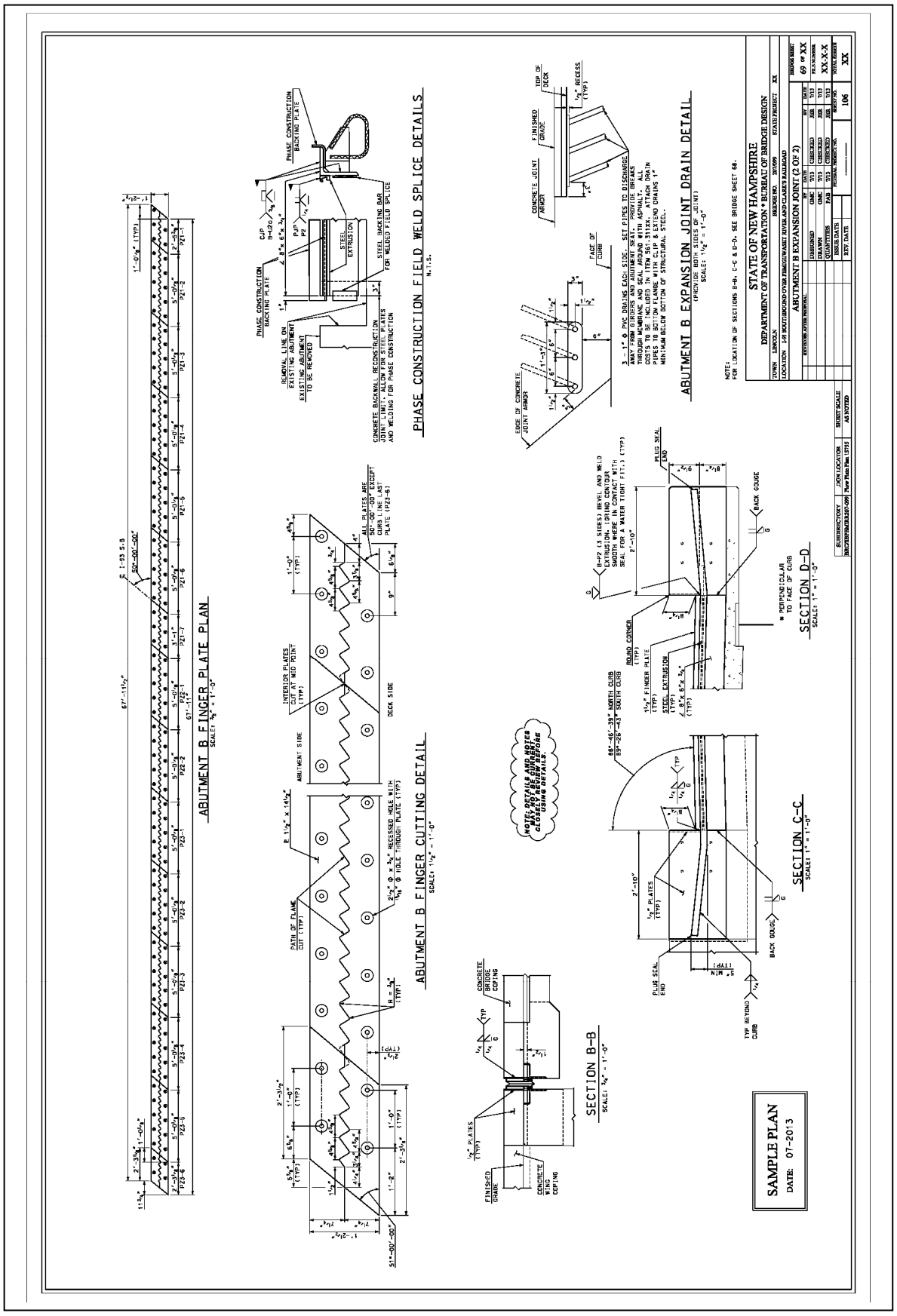
ABUTMENT B FINGER PLATE PLAN
SCALE: 3/8" = 1'-0"
PHASE CONSTRUCTION FIELD WELD SPLICE DETAILS
N.T.S.
ABUTMENT B FINGER CUTTING DETAIL
SCALE: 1 1/2" = 1'-0"
SECTION B-B
SCALE: 3/4" = 1'-0"
SECTION C-C
SCALE: 1" = 1'-0"
SECTION D-D
SCALE: 1" = 1'-0"
ABUTMENT B EXPANSION JOINT DRAIN DETAIL
(PROVIDE BOTH SIDES OF JOINT)
SCALE: 1 1/2" = 1'-0"
NOTE:
FOR LOCATION OF SECTIONS B-B, C-C & D-D, SEE BRIDGE SHEET 6A.
STATE OF NEW HAMPSHIRE
DEPARTMENT OF TRANSPORTATION • BUREAU OF BRIDGE DESIGN
ABUTMENT B EXPANSION JOINT (2 OF 2)
SAMPLE PLAN
DATE: 07-2013

Note: For sections, see the following sheets.

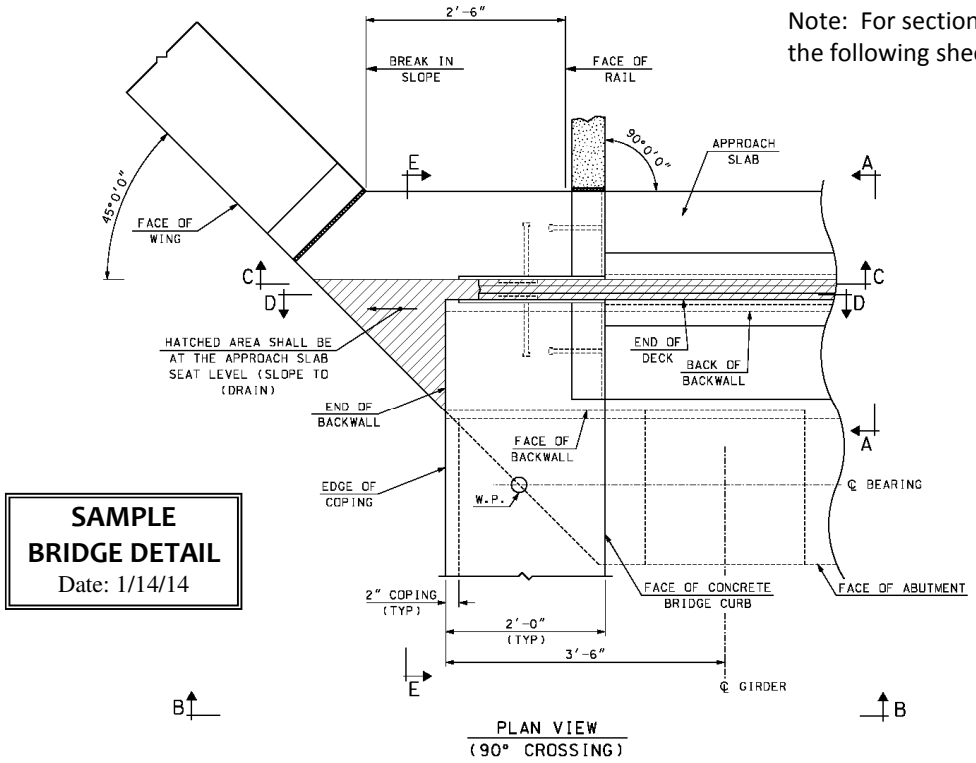

SAMPLE BRIDGE DETAIL
Date: 1/14/14

PLAN VIEW
(90° CROSSING)

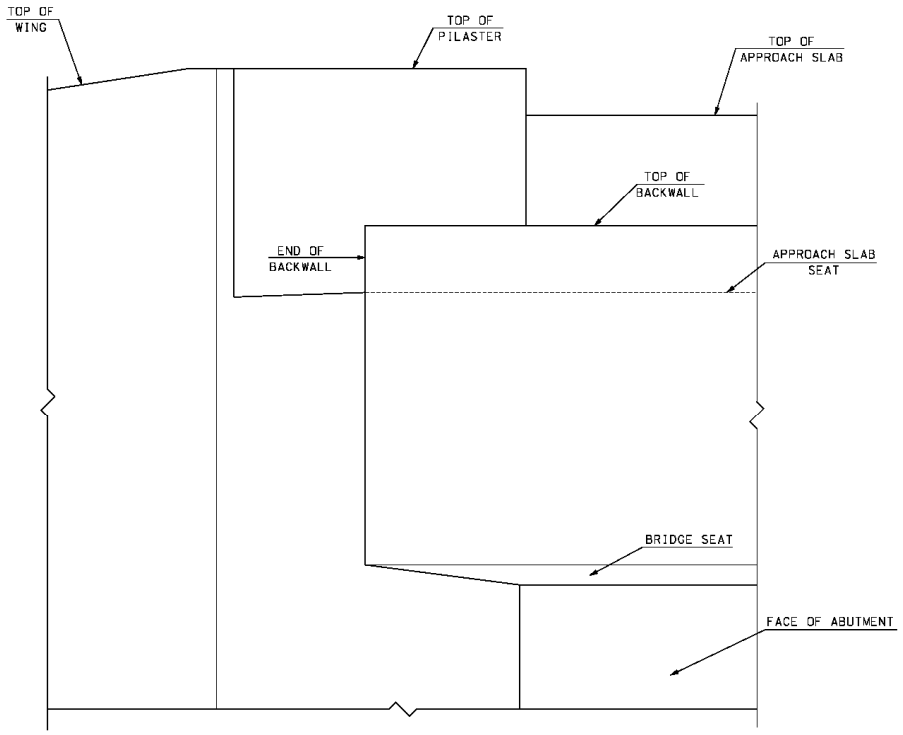

SECTION B-B
DECK NOT SHOWN FOR CLARITY

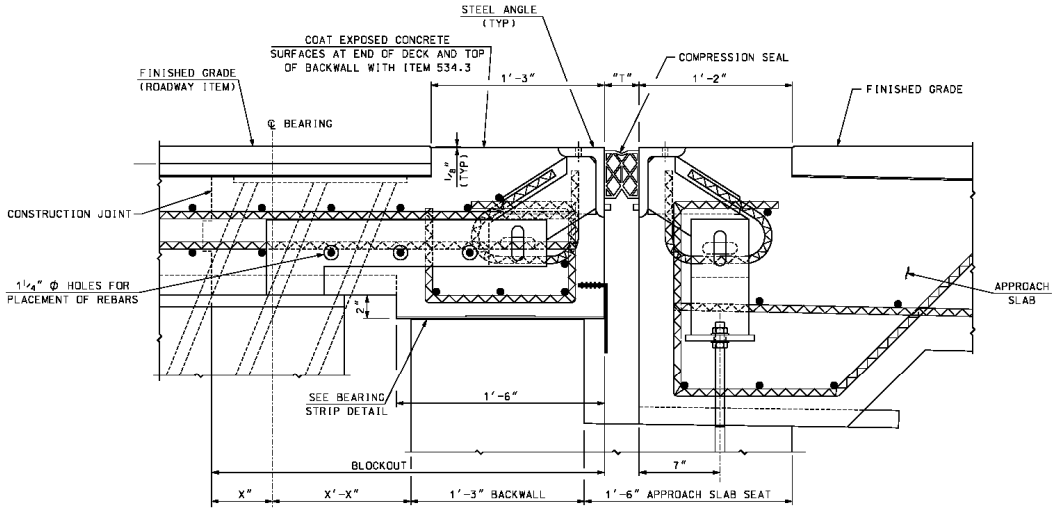

SECTION A-A

SAMPLE
BRIDGE DETAIL
Date: 1/14/14

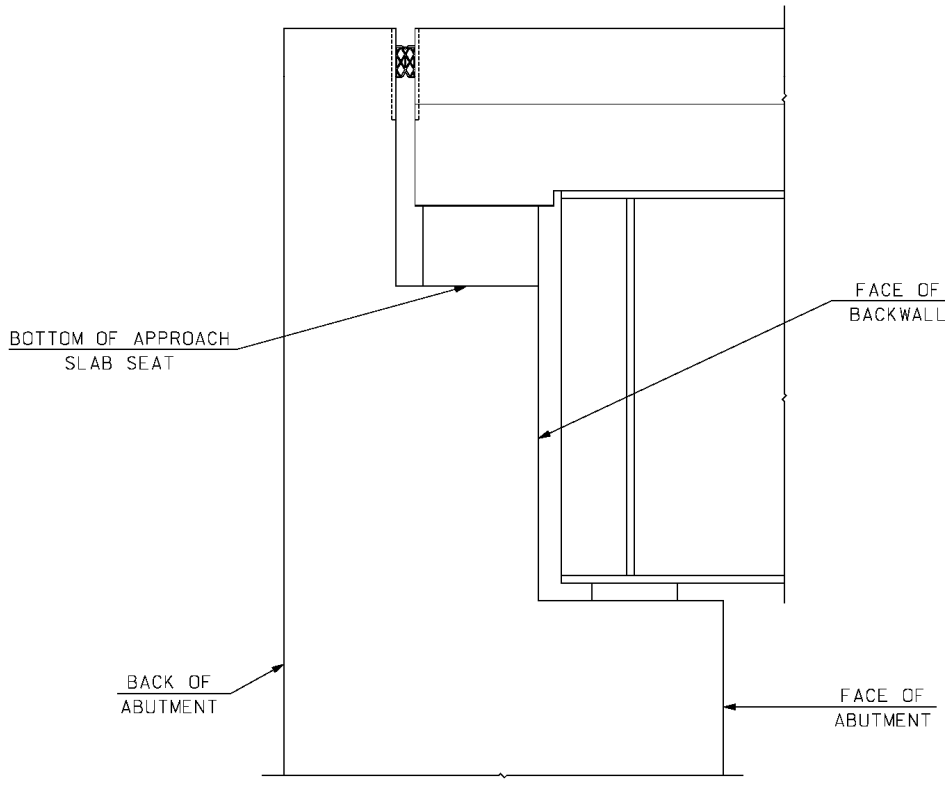

SECTION E-E

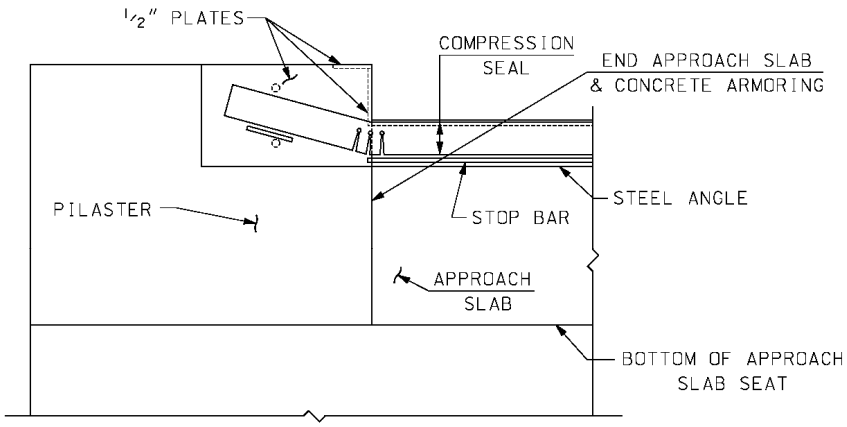

SECTION C-C

SAMPLE BRIDGE DETAIL
Date: 1/14/14

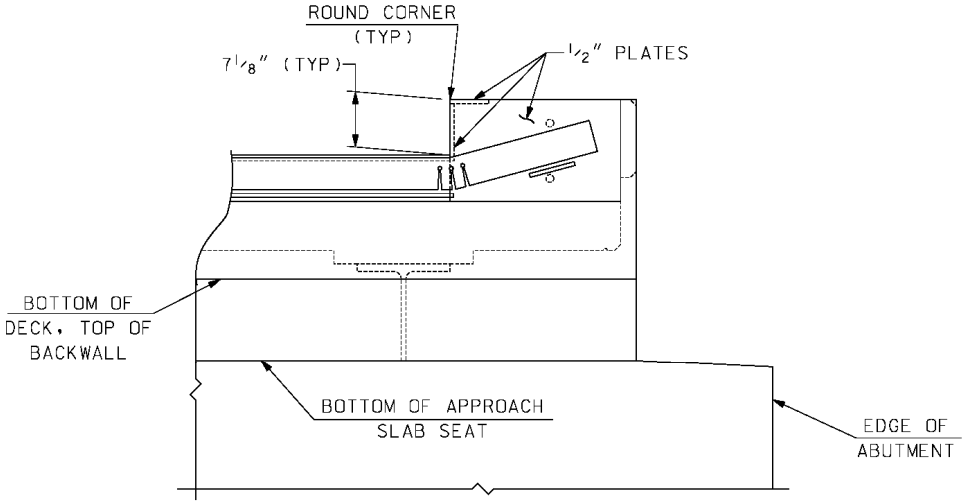

SECTION D-D

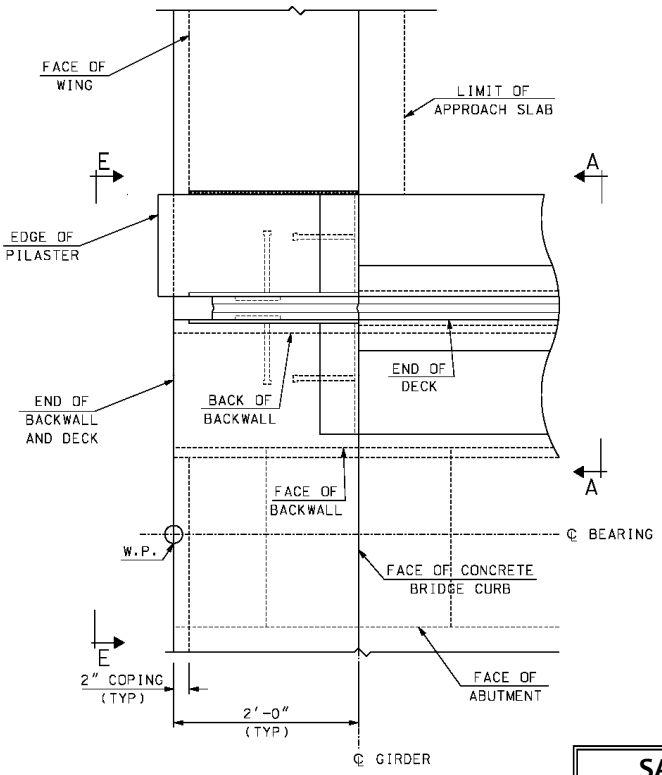

PLAN VIEW
(U-BACK WINGS)

SAMPLE BRIDGE DETAIL
Date: 1/14/14

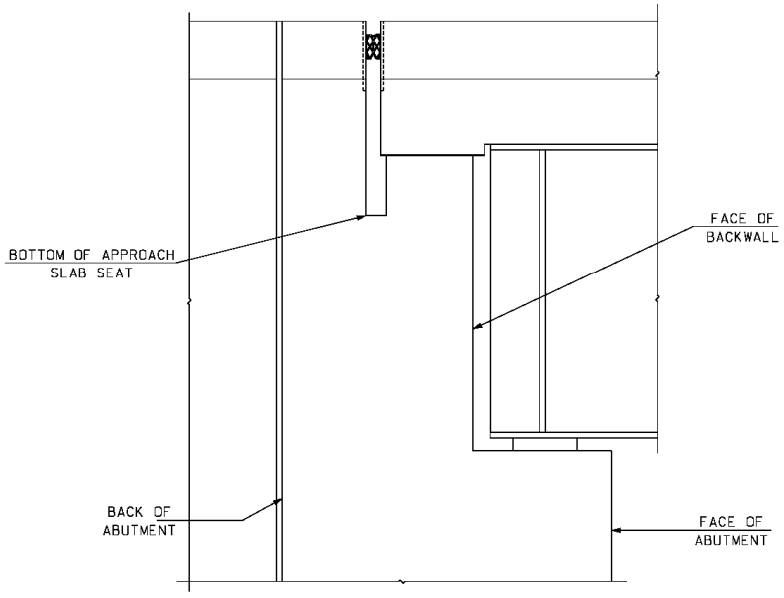

SECTION E-E

Note to Designer:

Locating the expansion joint behind the backwall may not provide the best geometry layout depending on the skew of the bridge and the angle of the wing. The expansion joint may need to be located in front of the backwall.

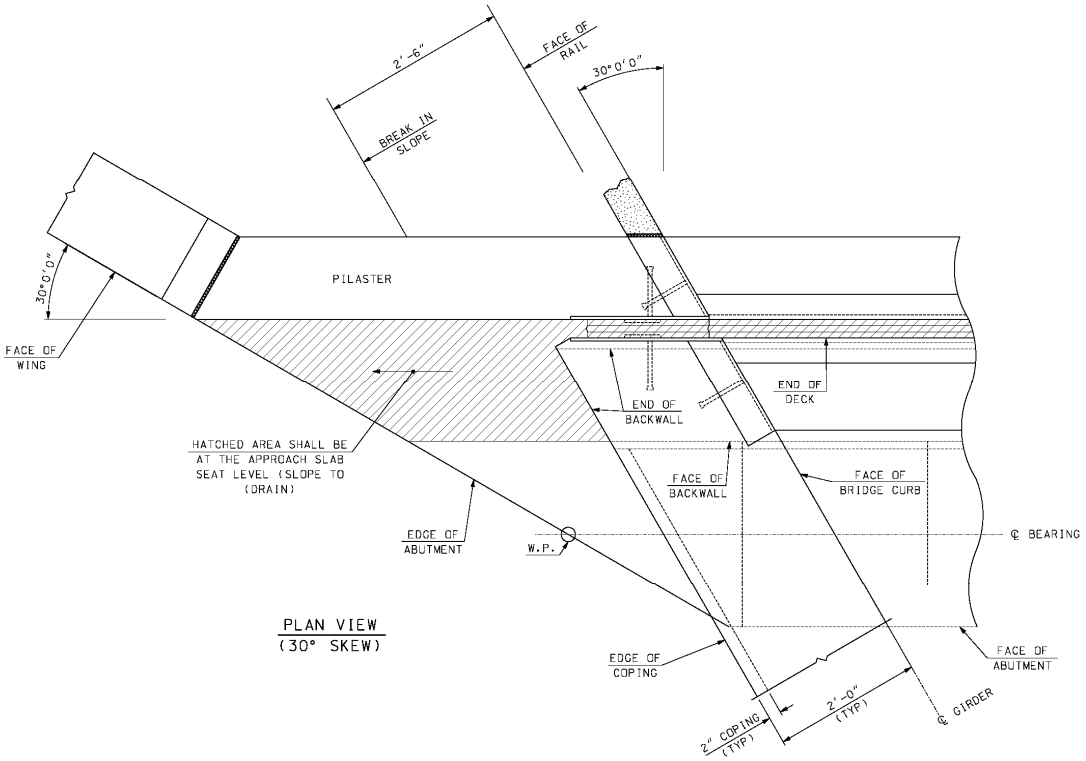

SAMPLE BRIDGE DETAIL
Date: 1/14/14

Note: For sections, see the following sheets.

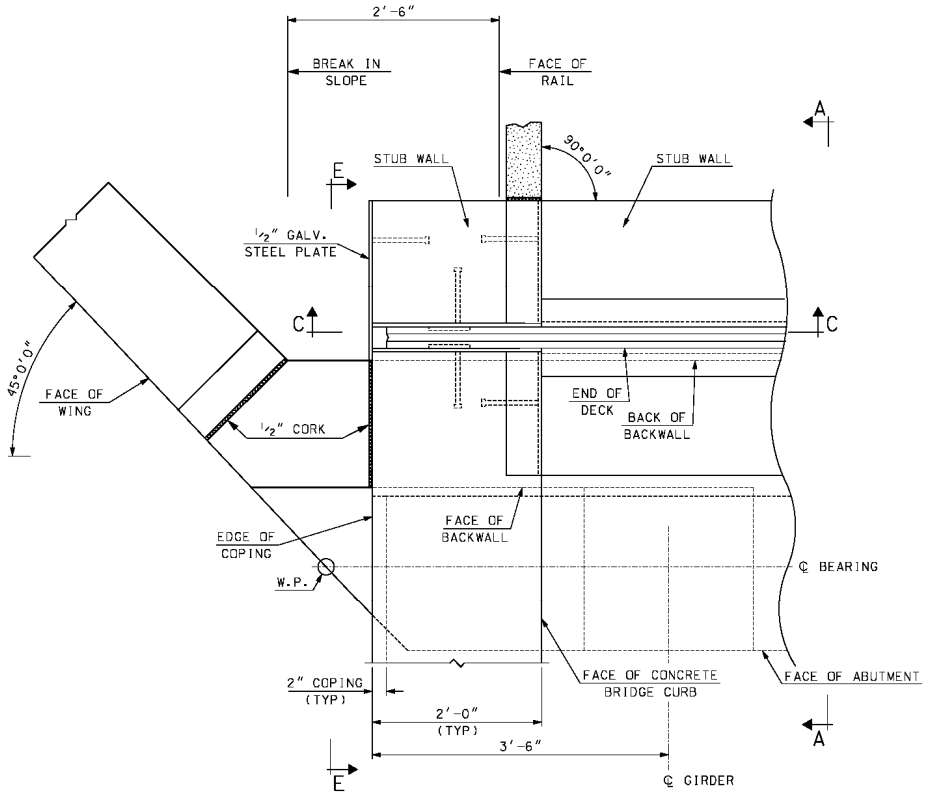

PLAN VIEW
(EXISTING BRIDGE:
JOINT REPLACEMENT-STUBWALL)

SAMPLE BRIDGE DETAIL
Date: 1/14/14

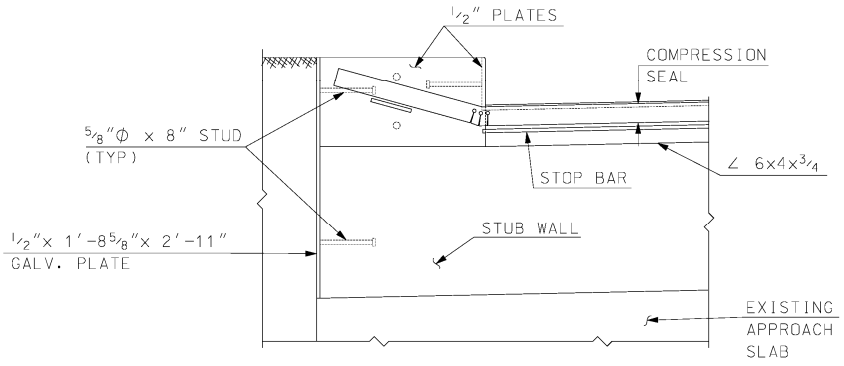

SECTION C-C

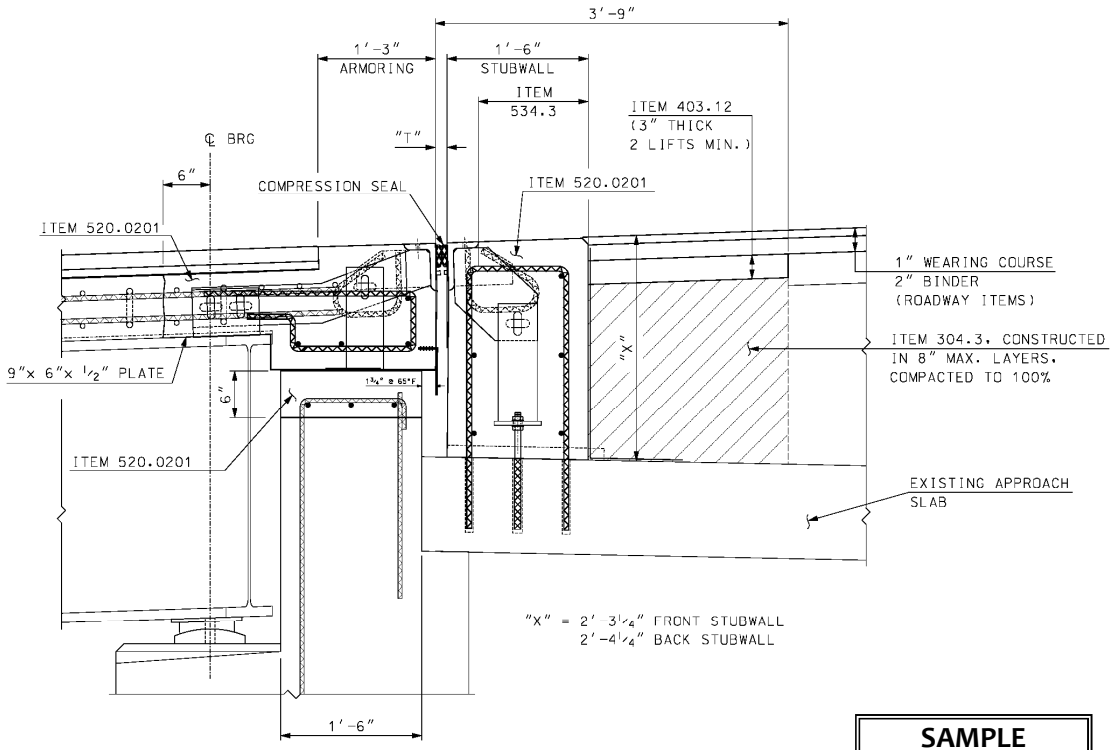

SECTION A-A RECONSTRUCTION

SAMPLE
BRIDGE DETAIL
Date: 1/14/14

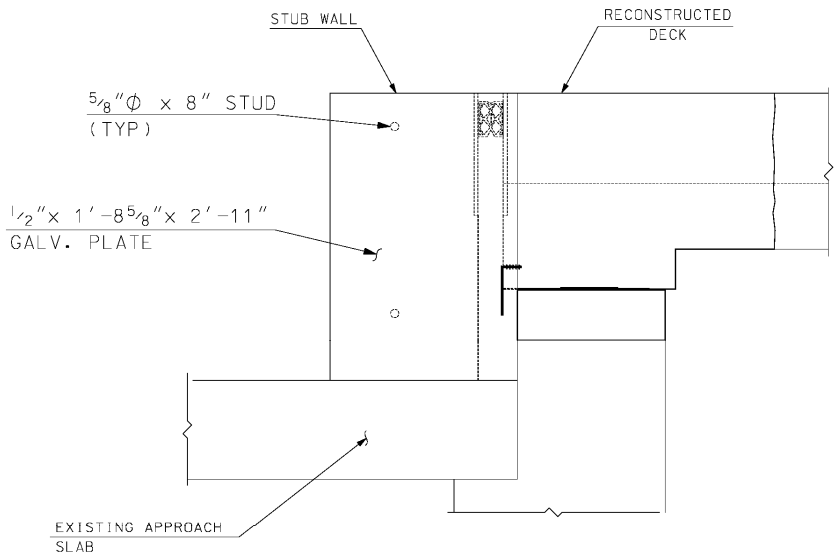

SECTION E-E

Note: For sections, see the following sheets.

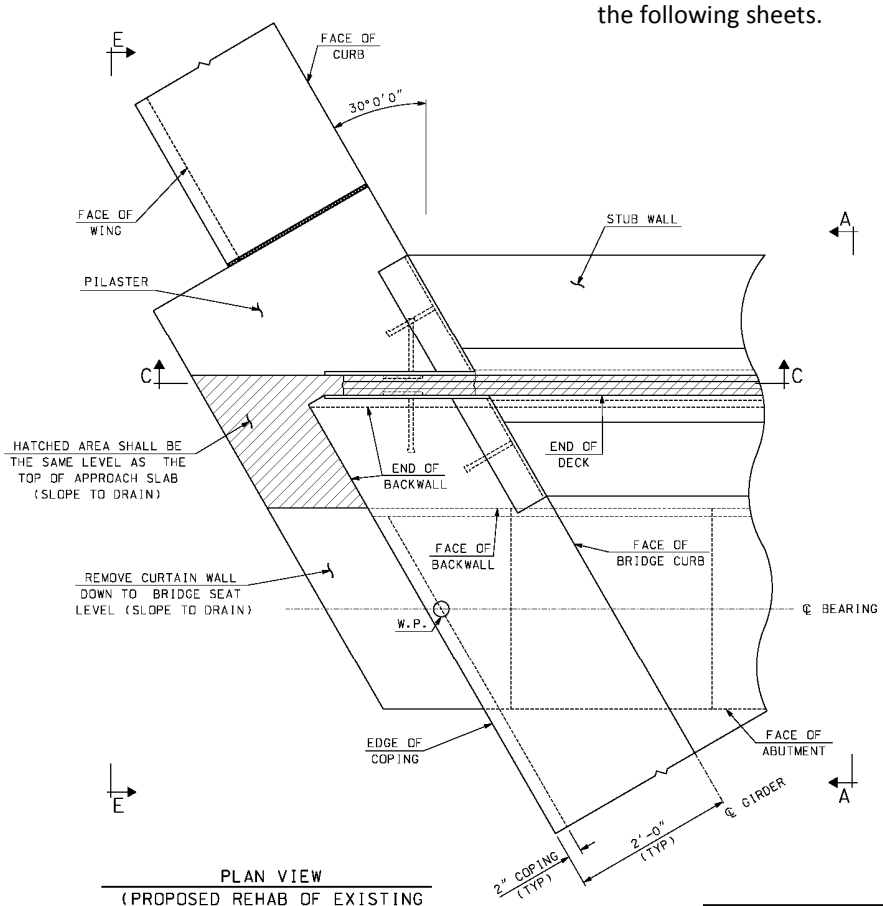

PLAN VIEW
(PROPOSED REHAB OF EXISTING BRIDGE: 30° SKEW, CURTAIN WALL, JOINT REPLACEMENT-STUBWALL)

SAMPLE BRIDGE DETAIL
Date: 1/14/14

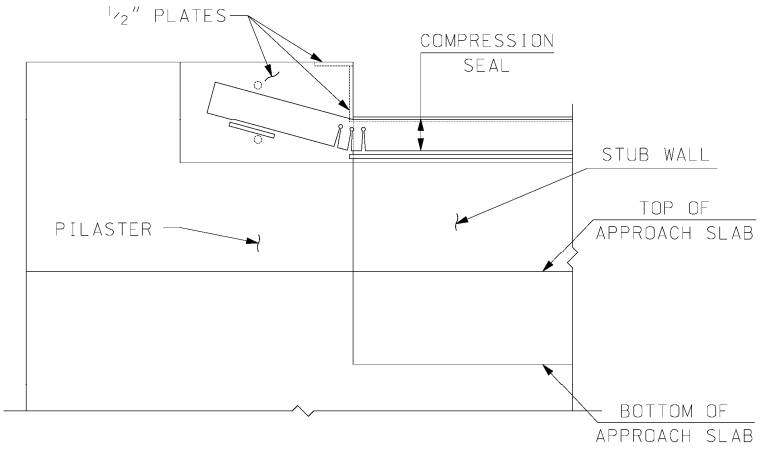

SECTION C-C

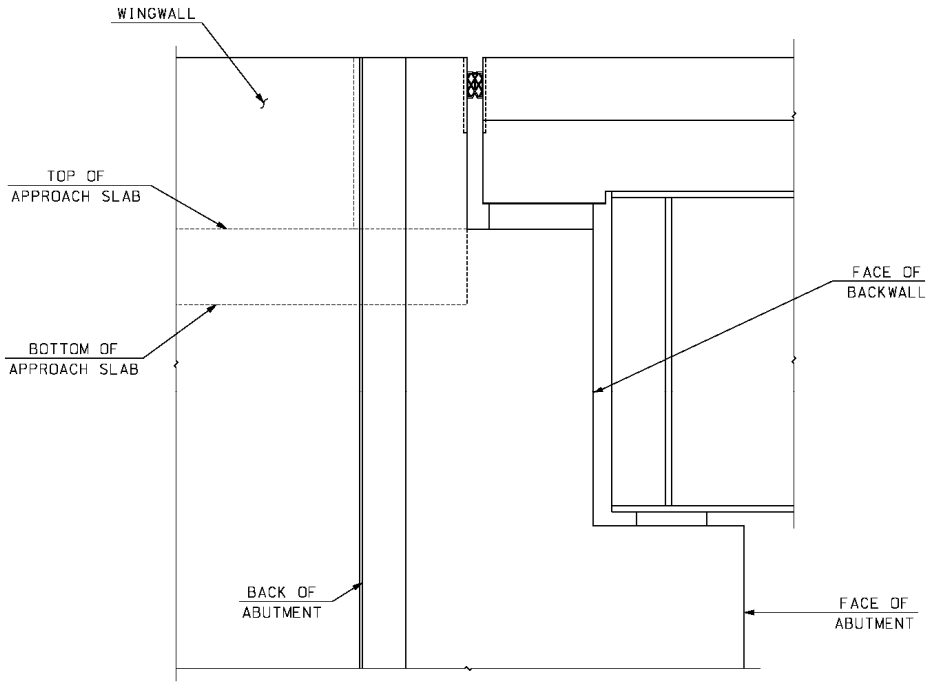

SECTION E-E

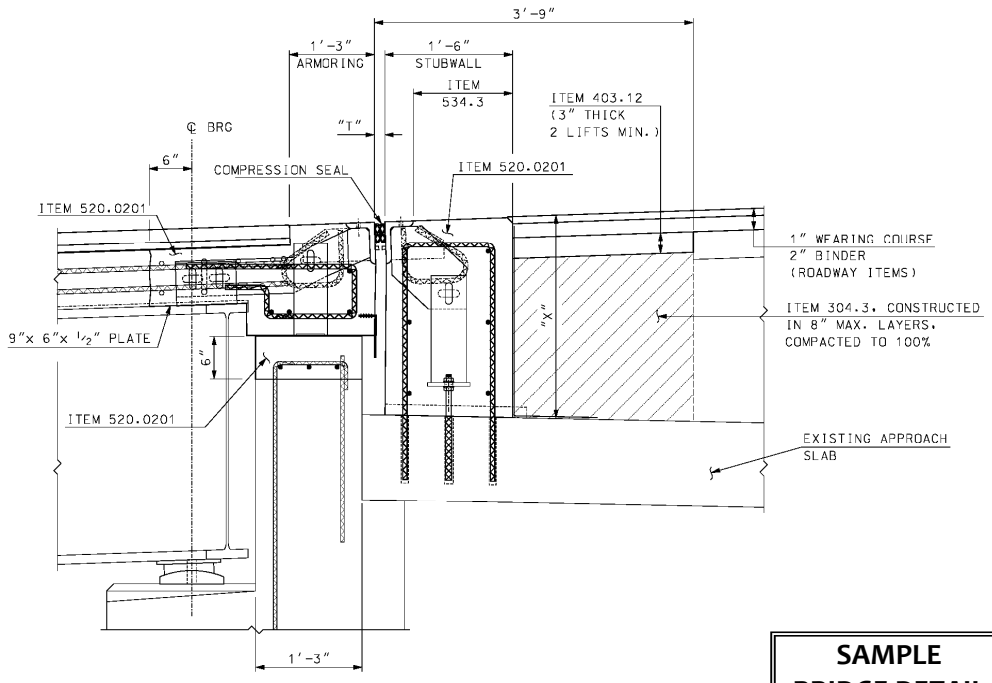

SECTION A-A RECONSTRUCTION

SAMPLE BRIDGE DETAIL
Date: 1/14/14

Page intentionally left blank.

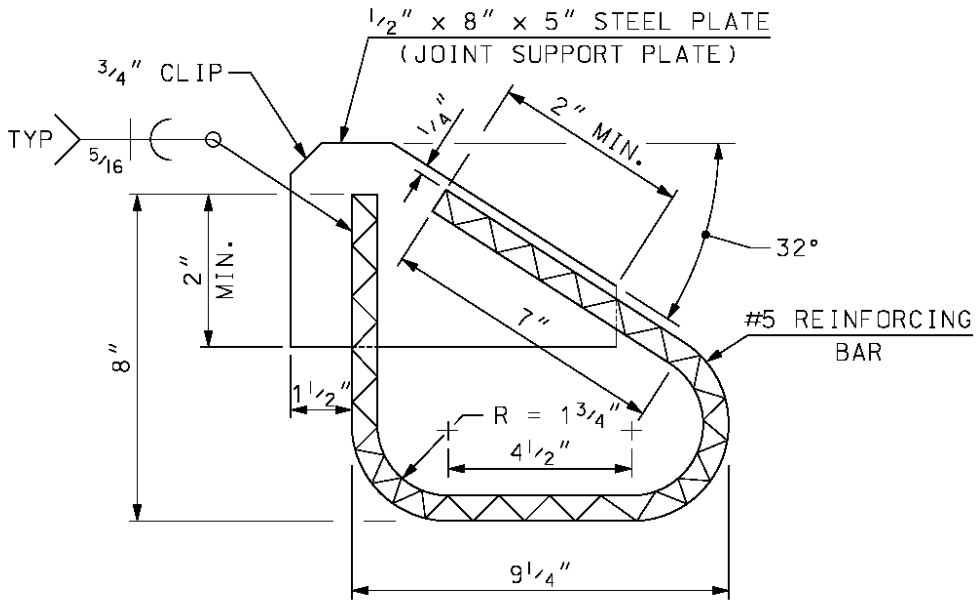

ANCHOR DETAIL (90° CROSSING)

BRIDGE DETAIL
Date: 1/14/14

1. IF EXPANSION JOINT IS LOCATED BEHIND THE BACKWALL AND BRIDGE IS SKEWED, THE ANCHOR DETAIL FOR *BOTH* THE DECK AND APPROACH SLAB SHALL BE FABRICATED TO MATCH THE BRIDGE SKEW AND IN-LINE WITH THE LONGITUDINAL REINFORCING.

2. IF EXPANSION JOINT IS LOCATED IN FRONT OF THE BACKWALL AND BRIDGE IS SKEWED, THE ANCHOR DETAIL FOR THE DECK SHALL BE FABRICATED TO MATCH THE BRIDGE SKEW AND IN-LINE WITH LONGITUDINAL REINFORCING. THE ANCHOR DETAIL FOR THE BACKWALL SHALL BE 90°.

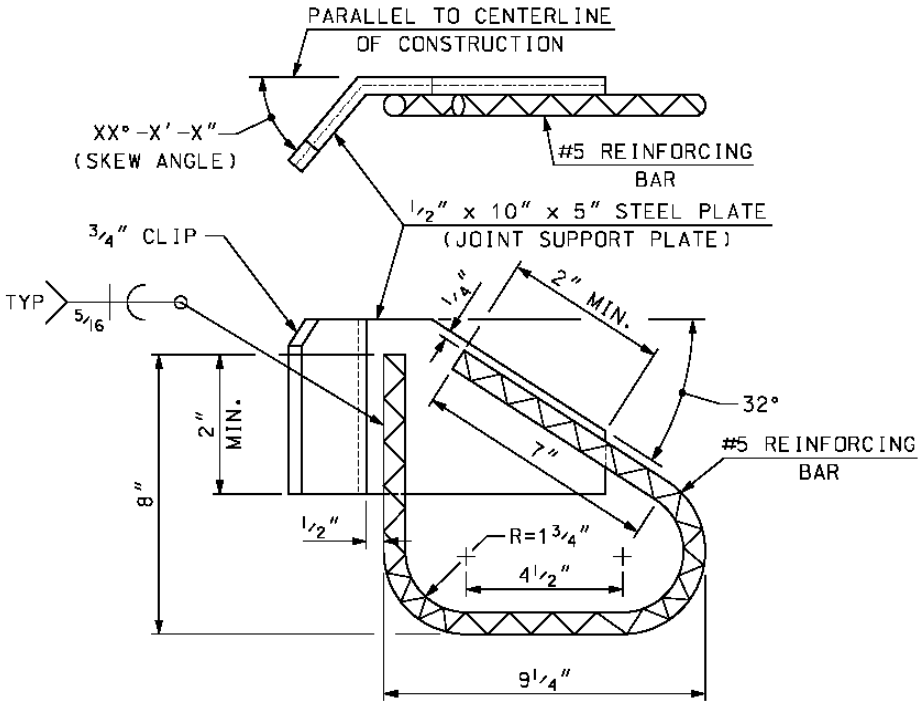

ANCHOR DETAILS (SKEWED)

BRIDGE DETAIL
Date: 1/14/14

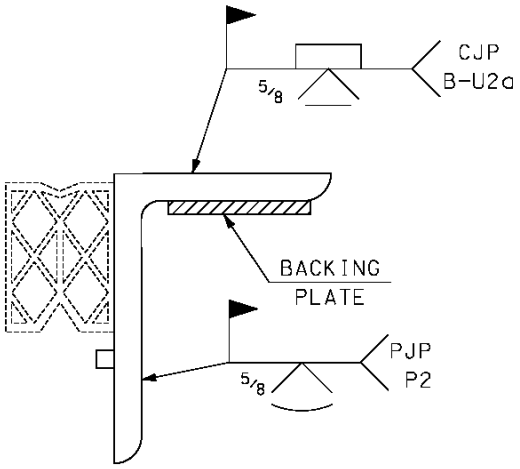

FIELD SPLICE WELD DETAIL–
COMPRESSION SEAL

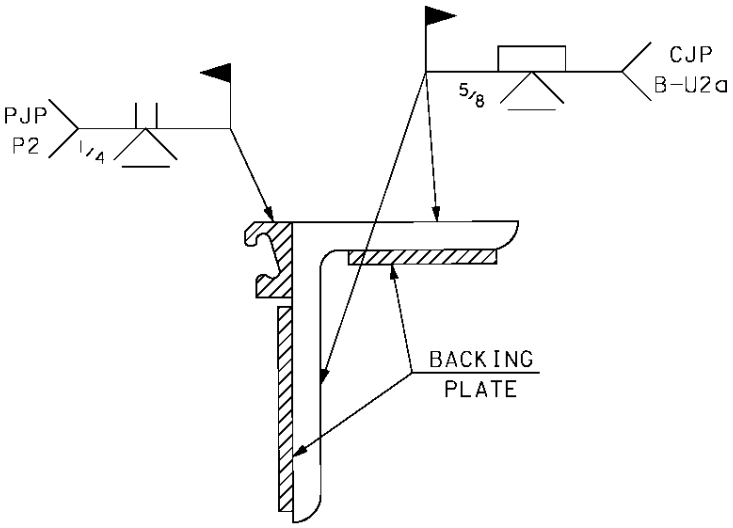

FIELD SPLICE WELD DETAIL–
STRIP SEAL

BRIDGE DETAIL
Date: 1/14/14

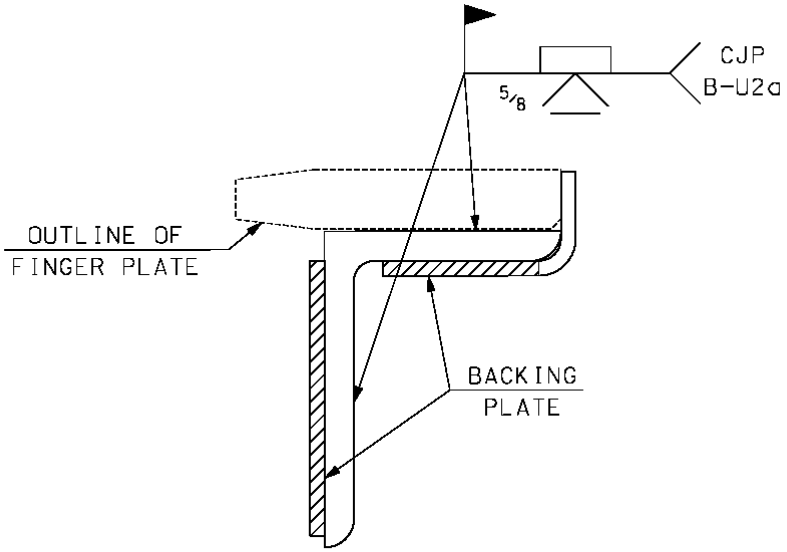

FIELD SPLICE WELD DETAIL-
FINGER JOINT

BRIDGE DETAIL
Date: 1/14/14

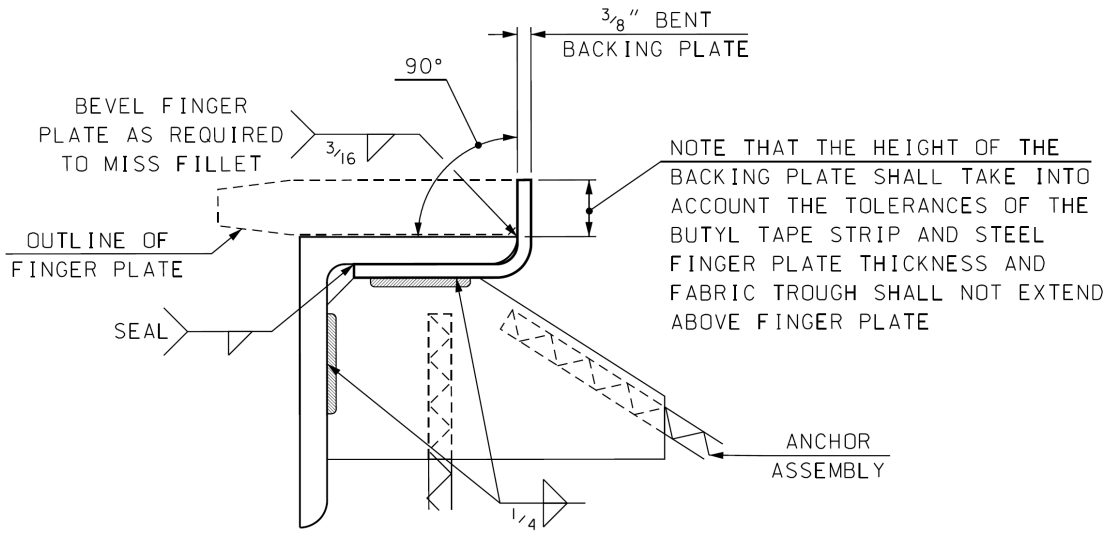

BACKING PLATE DETAIL

Note to Designer:

Use detail for finger expansion joints and plow protection plates.

BRIDGE DETAIL
Date: 1/14/14

Page intentionally left blank.

SUPPLEMENTAL SPECIFICATION

AMENDMENT TO SECTION 520 – PORTLAND CEMENT CONCRETE

The purpose of this supplemental specification is to clarify equipment requirements and specify the material of the bearing strip.

Amend 520.3.1.3.2.1(k) to read:

(k) Sufficient number of microwave safe **ceramic or porcelain** dishes.

Replace 2.8 Waterstops with the following:

2.8 Secondary Materials.

2.8.1 Waterstops. Waterstops shall conform to 541.

2.8.2 Bearing Strips. The bearing strip material shall be ultra-high molecular weight polyethylene (UHMW-PE), ¼" minimum thickness, grade Virgin Natural or Reprocessed, with rubber-back on one side. The bearing strip shall be one of the products listed on the NHDOT Qualified Product List, Section 520.

2.8.2.1 The bonding agent used with the construction of the expansion surface shall be product recommended by the manufacturer of the rubber-backed UHMW-PE.

Add to 3.6.3 Expansion Joints:

3.6.3.3 Bearing Strips. The bearing strip material shall be used as an expansion surface between the top of the backwall and bottom of deck at the expansion end of a bridge, as detailed on the plans.

SUPPLEMENTAL SPECIFICATION

SECTION 559 – ASPHALTIC PLUG EXPANSION JOINT, ASPHALTIC PLUG CRACK CONTROL

This supplemental specification adds a new section to the NHDOT Standard Specifications for Road and Bridge Construction.

Description

1.1 This work shall consist of all the work, including saw cutting and asphalt removal, as required to furnish and install a water tight asphaltic plug expansion joint and/or a water tight asphaltic plug for crack control, as shown on the plans. The asphaltic plug expansion joint and crack control is a commercial product and must be installed in accordance with the manufacturer's recommendations. When joint repair is specified, this work shall also include saw cutting, removal and disposal of the existing joint materials, as required to furnish and install a water tight asphaltic plug expansion joint and/or crack control, as shown on the plans.

Materials

2.1 The asphaltic plug expansion joint shall be one of the products listed on the NHDOT Qualified Product List, Item 559. The asphaltic materials (hot applied polymer modified asphaltic binder and aggregate) shall be applied by an applicator approved by the Manufacturer and shall meet the requirements of ASTM D6297. All components (except closed cell expansion material) of the asphaltic plug joint system shall be from one manufacturer.

2.2 Asphaltic Plug Material. The asphaltic plug material for crack control shall be one of the products listed on the NHDOT Qualified Product List, Item 559. The asphaltic materials (hot applied polymer modified asphaltic binder and aggregate) shall be applied by an applicator approved by the Manufacturer and shall meet the requirements of ASTM D6297.

2.3 Asphaltic Binder Material. The asphaltic binder material for both expansion joint and crack control shall meet the polymeric modified asphaltic requirements of ASTM D6297.

2.4 Steel Support Plate. The steel support plate for the asphaltic plug expansion joint shall meet the requirements of ASTM D6297 or as recommended by the Manufacturer. The plate shall be galvanized as specified in Section 550.2.9, have a maximum length of 6 ft., and shall have pre-drilled holes at 12-in. (300 mm) on center for inserting the locating pins.

2.5 Backer Rod. The backer rod for the asphaltic plug expansion joint shall be a closed cell, high temperature, heat resistant material that meets the requirements of ASTM D5249.

2.6 Closed Cell Expansion Material. The closed expansion material used as a joint filler between the deck and approach slab or stub wall shall be a pre-formed, low-density, closed cell,

cross-linked, EVA polyethylene co-polymer or polyethylene (XLPE) material that is flexible, waterproof, chemical resistant, and to be used as a compressible foam between concrete pours for full-depth protection. The product shall be resistant to abrasion, oxidation, oils, gasoline, salt and other materials that may come in contact with the surface. The material shall conform to ASTM D-1056, 2B2 and be a product as listed on the QPL, Section 559.

2.6.1 The closed cell expansion material shall have the following physical properties per ASTM D3575:

Property	Test Method	Requirement
Water absorption	Suffix L	< 0.03 lb/ft²
Density	Suffix W	2.0 – 4.0 pcf
Compression Deflection	Suffix D	5 psi @ 25% min.
Elongation	Suffix G	200% min.
Tensile Strength	Suffix T	50 psi min.
Tear Strength	Suffix G	10 pli min.
Compression Set (@ 50% for 22 hrs)	ASTM D-1056 Suffix B	15% max. @ 24 hr. recovery

2.6.2 The closed cell expansion material shall be furnished as detailed on the plans and shall be accepted based upon receipt of Certificate of Compliance stating that the product complies with the requirements of Section 2.6.1.

Construction Requirements

3.1 The treatment of the deck, at grade approach slab, asphalt, and membrane waterproofing surface, and the preparation and installation of material shall be as recommended by the Manufacturer.

3.2 Certificate of Compliance. At least one week prior to the installation of the asphaltic plug expansion joint and/or crack control, the Engineer shall be provided with a certificate of compliance stating that all materials and equipment used for proper installation for the asphaltic joint complies with the requirements of this specification. All material delivered to the job site shall have a written certification that includes the following: 1) A label clearly showing the manufacturer's name, lot or batch number, date of manufacture, and date of packaging. 2) The date, if any, beyond which the material shall not be used without approval. 3) All the materials have been pre-tested and will meet the requirements of this specification. 4) The manufacturer's instruction for use and installation. All necessary equipment and manufacturer personnel as recommended shall be on site prior to beginning construction. 5) Certificate of analysis of the asphaltic plug material.

3.3 Basis of Acceptance. All materials and equipment shall be accepted upon certification by the qualified manufacturer, to the Engineer, that all the requirements of this specification have been met.

3.4 Installation. For each project, as recommended by the manufacturer, a trained, and certified technical representative with not less than 3 years of experience specializing in the installation of an asphaltic plug joint, shall be present during initial installations of the asphaltic plug expansion joint system to aid and instruct the Contractor as required to achieve an installation in accordance with the Manufacturer's requirements and specifications.

3.4.1 For the asphaltic plug expansion joint, sawcut and completely remove the asphalt or existing asphaltic plug joint and membrane, down to the steel plate location as shown on the plans, to create a neatly formed blockout. The joint area shall be blast cleaned of debris and asphalt. The joint area shall be thoroughly dried using hot compressed air immediately prior to applying the asphaltic material. The blockout sides and base shall be inspected for defects and those noted shall be brought to the attention of the Engineer for direction regarding repairs of these areas. The sides of the blockout shall be vertical and clean with no loose material after inspection. The base shall be LEVEL between both sides of the bridge expansion gap. Proper leveling shall only be achieved by grinding or thin-set mortar. Mastic product or asphaltic binder material shall not be used under the support plates to create a level surface.

3.4.2 For repair of an existing asphaltic plug joint, the existing plug joints shall be saw cut and removed to full depth in accordance with the plans or as ordered by the Engineer. Waterproof membrane materials, if present, shall be removed as required. If a steel plate is present, it shall be replaced with a new plate, as shown on the plans. Any concrete repair work required to provide a level surface between both sides of the expansion gap, shall be paid for under Section 109.4. All concrete, steel, and asphalt joint surfaces shall be prepared and treated as recommended by the Manufacturer's technical representative.

3.4.3 For the asphaltic plug for crack control, sawcut and completely remove the asphalt and membrane or existing asphaltic material as shown on the plans, to create a neatly formed blockout. The bottom of the blockout shall be level with the top of the deck concrete. The blockout area above the deck concrete shall be free of asphalt, and the blockout area over approach roadway asphalt shall be blast cleaned to be free of loose asphalt debris. The joint area shall be thoroughly dried using hot compressed air immediately prior to applying the asphaltic material.

3.4.4 The backer rod shall continue into the curb gap and be placed at a uniform depth following the geometry of the curb for placement and tooling of sealant as shown on the plans. The bridge asphaltic joint shall be completely cool before installation of the curb sealant over the backer rod.

3.4.5 The asphaltic material shall be heated, mixed and placed in two (2) lifts using machinery and/or equipment supplied or recommended by the Manufacturer.

3.4.6 Placement, screeding, and compaction of the asphaltic plug material shall be as recommended by the Manufacturer. Compaction shall be accomplished utilizing plate compactors or rollers.

3.4.7 A skim coat of liquid asphaltic binder material shall be applied to fill any remaining surface voids.

3.4.8 To prevent joint damage from tire traffic, shot blast media (clean, unused) shall be broadcast onto the finished joint surface while the asphaltic material is still warm.

3.4.9 The application of the asphaltic binder and the asphaltic material shall be performed only if 1) The surface temperature is a at least of 40° F (4° C) and rising, 2) The road surface is dry, 3) Weather conditions are favorable with no signs of imminent rain.

3.4.10 Protect the joint from traffic until the material has cooled to 125° F (51° C)± and is able to support traffic.

3.5 Warranty for Asphaltic Plug Expansion Joint (Item 559.4)

3.5.1 Limits of Warranted Work. The warranted work includes all asphaltic expansion joint systems and installation within the project limits unless otherwise indicated in the proposal. This includes all necessary Maintenance of Traffic, all incidentals, and any uniformed traffic control personnel required to complete the warranted work. The Maintenance of Traffic shall be designed and implemented in accordance with the Contract requirements and with the latest edition of the Manual of Uniform Traffic Control Devices (MUTCD).

3.5.2 Warranty Period. The length of warranty will be three (3) years from the acceptance date of construction, as specified in the following sections of the specification and in compliance with Section 106.04 and 107.14 of NHDOT Standard Specifications for Road and Bridge Construction.

3.5.3 Warranty Parameters. The following parameters shall be used to measure the performance of the asphaltic plug expansion joint system during the warranty period. Each condition parameter has a threshold limit (listed in Section 3.5.4) that defines when corrective action (warranty work) is required.

3.5.3.1 Debonding. Physical separation of the asphaltic expansion joint from the adjacent vertical face of the pavement or the bridge deck.

3.5.3.2 Transverse crack. Any open crack that extends more in the transverse direction (perpendicular to traffic flow) than in the longitudinal direction.

3.5.3.3 Longitudinal crack. Any open crack that extends more in the longitudinal direction (parallel to traffic flow) than in the transverse direction.

3.5.3.4 Leakage. Visual seepage of water.

3.5.3.5 Rutting. Depression, displacement, or dislodgment of the asphaltic plug expansion joint surface.

3.5.4 Warranty Requirements. The following table lists the allowable threshold limit for each condition parameter for each asphaltic plug expansion joint. If any of the warranty thresholds are exceeded, corrective action (warranty work) is required.

ASPHALTIC PLUG EXPANSION JOINT WARRANTY REQUIREMENTS	
Condition Parameter	**Threshold Limit for each Asphaltic Expansion Joint**
Debonding (any edge)	5% total of the joint length, with no single debonded section greater than two (2) feet.
Transverse cracking	sum length of all cracks > 5% total length of joint, with no single crack greater than two (2) feet.
Longitudinal cracking	sum length of all cracks > joint longitudinal dimension
Leakage	Visible seepage of water
Rutting	Maximum depth ½”

3.5.4.1 Warranty Work (Corrective Action). If any of the threshold limits for the asphaltic plug expansion joint are exceeded, the Contractor shall submit in writing the Manufacturer’s corrective action plan to the Department for approval.

Method of Measurement

4.1 Asphaltic plug expansion joint will not be measured, but shall be the linear foot (linear meter) final pay quantities in accordance with 109.11 as shown on the plans.

4.2 Repair asphaltic plug expansion joint will not be measured, but shall be the linear foot (linear meter) final pay quantities in accordance with 109.11 as shown on the plans.

4.3 Asphaltic plug for crack control will not be measured, but shall be the linear foot (linear meter) final pay quantities in accordance with 109.11 as shown on the plans.

Basis of Payment

5.1. Asphaltic plug type expansion joint is final pay quantity item and will be paid at the contract unit price per linear foot (linear meter) complete in place in accordance with 109.11.

5.2. Repair asphaltic plug type expansion joint is final pay quantity item and will be paid at the contract unit price per linear foot (linear meter) complete in place in accordance with 109.11.

5.3. Asphaltic plug for crack control is a final pay quantity item and will be paid at the contract unit price per linear foot (linear meter) complete in place in accordance with 109.11.

5.4 The closed cell expansion material will be subsidiary to Item 559.4 Asphaltic Plug Expansion Joint.

Pay item and unit:

559.4	Asphaltic Plug Expansion Joint (F)	Linear Foot (Linear Meter)
559.41	Asphaltic Plug for Crack Control (F)	Linear Foot (Linear Meter)
559.412	Repair Asphaltic Plug Expansion Joint (F)	Linear Foot (Linear Meter)

S U P P L E M E N T A L S P E C I F I C A T I O N

AMENDMENT TO SECTION 560– PREFABRICATED COMPRESSION SEAL EXPANSION JOINT

This supplemental specification replaces Section 560 – Prefabricated Compression Seal Expansion Joint.

Replace Section 560 with the following:

Description

1.1 This work shall consist of fabricating, furnishing and installing one of the following: (a) watertight prefabricated expansion joint utilizing a single preformed polychloroprene elastomeric (neoprene) compression seal, (b) watertight prefabricated expansion joint utilizing a single preformed polychloroprene elastomeric compression seal with a prefabricated plow plates, in accordance with the contract plans, specifications, and the manufacture's recommendations.

Materials

2.1 Compression Seal. The compression seal shall be polychloroprene elastomeric (neoprene) material conforming to AASHTO M297 (ASTM D3542) and meet the configuration shown on the plans and shall be a product as included on the Qualified Products List. Each seal shall be furnished full length. Splices in the length of an individual seal will not be permitted unless the splices are made at the plant by the manufacturer of the seal with the approval of the Department. The seal material shall be identified with the production date, manufacturer's name or trademark, and lot number.

2.2 Steel Members. Steel members for prefabricated expansion joint and plow plates shall conform to specifications AASHTO M 223/M 223M (ASTM A 572/A 572M) Grade 50. Minor steel plates and stop bars may conform to specifications AASHTO M 183/M 183M (ASTM A 36/A 36M).

2.2.1 Studs shall meet the requirements of AASHTO M 169 (ASTM A 108).

2.2.2 All steel members shall be galvanized conforming to Section 550.2.9 and Section 708, Appendix A, 3.2.3, 3.2.4 and 3.2.5. If distortion becomes an issue, an approved zinc rich coating shall be used as approved by the Engineer.

2.2.3 Anchorage of the compression seal expansion joint to the backwall and deck, between the curb lines, shall be made using a loop rebar attached to a joint support plate and shall be spaced at 1'-0" (300 mm) maximum, as shown on the plans. Brush curb and sidewalk anchorage shall be made of stud anchors and shall be spaced at 1'-6" (450 mm) maximum, as shown on the plans. The anchorage reinforcement shall extend into the backwall or curb reinforcement cage for proper anchorage.

2.3 Lubricant Adhesive. Lubricant adhesive shall be a one-part moisture curing polyurethane and aromatic hydrocarbon solvent mixture meeting the requirements of ASTM D4070 for use in lubricating preformed bridge seals for insertion and adhesion to metal and concrete surfaces.

2.3.1 Each lot of adhesive shall be delivered in containers plainly marked with the manufacturer's name or trademark and shall be accompanied by the manufacturer's affidavit attesting conformance with the specification.

2.4. Bolts for Plow Plates and Anchor Rods.

2.4.1 Bolts for the plow plates in roadway shall be ¾" diameter high-strength hexhead bolts conforming to ASTM A325, galvanized.

2.4.2 Anchor rods shall conform to ASTM 307, galvanized.

Construction Requirements

3.1 General. The expansion joint assembly shall be fabricated at an AISC certified plant with a certification in accordance to Section 550.3.2.

3.2 Fabrication.

3.2.1 Submittals. Shop fabrication drawings showing all details of the complete expansion joint assembly, such as dimensions, anchorage and welding procedures shall be submitted for approval in accordance with 105.02. Approval of the shop fabrication drawings shall be required prior to the manufacture of the assembly. Detailed welding procedures shall be considered an integral part of shop fabrication drawings and shall be submitted for approval along with the shop fabrication drawings. The shop fabrication drawings shall indicate the welding procedure to be used for each weld shown. The name of the manufacturer of the elastomeric compression seal shall be shown on the shop fabrication drawings. Original shop fabrication drawings, corrected, shall be delivered to the Department before the final payment is made.

3.2.1.1 The manufacturer instructions for the proper installation of the joint system shall be shown on the shop drawings. Shop drawings that lack the manufacturer installation instruction, may be returned without approval.

3.2.2 Fabrication and workmanship shall be performed in accordance with the applicable provisions of 550.3.

3.2.3 Preblast. All steel elements shall be blast cleaned before fabrication in conformance with the requirements of SSPC-SP 10, Near White Blast Cleaning. At the fabricators option, surfaces to be welded may be ground to bare metal. If the product is to be galvanized, blasting is not required before galvanizing.

3.2.4 Welding of steel shall be performed in accordance with 550.3.6. Welding shall be performed by prequalified welders and welding operators.

3.2.5 Stud Welding.

3.2.5.1 Studs shall be welded using automatically-timed stud welding equipment in accordance with AASHTO Welding Specifications, Section 7 (see Section 550.3.6.10). Welding by SMAW is an option only if approved by the Department.

3.2.5.2 Automatic equipment. Studs shall be welded with automatically timed stud welding equipment connected to a suitable source of direct current straight polarity power. Welding voltage, current, time, and gun settings for lift and plunge should be set at optimum settings, based on past practice, recommendations of stud and equipment manufacturer, or both. AWS C5.4, Recommended Practices for Stud Welding, should also be used for technique guidance.

3.2.5.3 Testing. The first two welded studs installed and ten percent (10%) of the remaining studs shall be tested. The test shall consist of bending the studs, after they are allowed to cool, to an angle of approximately 15 degrees from their original axes by either striking the studs on the head with a hammer or placing a pipe or other suitable hollow device over the stud and manually or mechanically bending the stud. If any studs fail the test, then all studs shall be tested. Acceptable bent studs shall be left in the bent position.

3.2.6 Shipping and adjusting devices required to ship, install, and adjust the joint assembly on the bridge shall be provided at approximately 4 ft. (1 m) spacings and shall be furnished and installed by the fabricator.

3.2.7 The joint system shall be fabricated by the manufacturer and delivered to the bridge site completely assembled, unless otherwise specified in the contract documents. The compression seal will be clearly identified for the corresponding joint location .

3.3 Inspection.

3.3.1 Notice. The fabricator shall give ample notice (two weeks minimum) of the beginning of work so that arrangements can be made for inspection. No materials shall be fabricated before the Engineer has been so notified.

3.3.2 The Department will inspect the fabrication of expansion joints. This inspection will include the examination of materials, welding, testing, work procedures, painting, and the final fabricated product.

3.3.3 The Engineer may waive shop inspection and make a complete inspection at a later stage in the construction sequence.

3.3.4 The Engineer shall visually inspect the seal material to confirm size, configuration, and identify possible defects in seal due to manufacturing or shipment. Any seal with defects shall be replaced at the Contractor’s costs.

3.3.5 When the materials are deliverd to the job site, the manufacturer shall provide a certification to the Engineer that all materials meet the specification requirements.

3.4 Installation. The joint assembly shall be installed in the bridge as shown on the plans, in strict accordance with the manufacturer's written instructions along with the advice of their qualified representative.

3.4.1 Class AA concrete shall be placed as blockout filler as directed.

3.4.2 The joint system shall be set to line and grade and 1/8" lower, with vertical offset as detailed on the plans, ensuring that the system's uppermost plane parallels the finished roadway profile.

3.4.3 In order for the expansion joint to be installed properly, it must be set at a width that is directly dependent upon the ambient temperature at the start of installation under the direction of the Engineer, as shown on the contract plans. The width setting shall be accomplished through the use of mechanical devices supplied by the fabricator.

3.4.4 Cleaning the mating surfaces of the steel elements shall be performed just prior to installing the seal. The steel and seal surfaces shall be cleaned in accordance with the manufacturer's recommendations.

3.4.5 Immediately after the joint has been secured to the structural steel and the abutment, the shipping and adjustment devices shall be removed and any bolt holes plug welded. Any welds on exposed surfaces shall be ground smooth. Repair any damaged galvanized surfaces according to Section 550.2.9.1.

3.4.6 The compression seal shall be inserted into the joint with tools that will not damage the seal and will place the seal at the proper level in the joint. The seal shall be installed in the joint without stretching.

3.4.7 The depth of setting the compression seal below the joint surface is critical to its performance. The seal shall be set in accordance to the depth indicated on the plans or per manufacturer's recommndation.

3.5 Watertight Integrity Test. At least five work days after the joint system has been fully installed, the Contractor shall test the entire (full length) joint system for watertight integrity employing a method satisfactory to the Engineer. The entire joint system shall be covered with water, either ponded or flowing, for a minimum duration of 15 minutes. The concrete surfaces under the joint shall be inspected, during this 15 minute period and also for a minimum of 45 minutes after the supply of water has stopped, for any evidence of dripping water or moisture. Water tightness shall be interpreted to be no free dripping water on any surface on the underside of the joint. Patches of moisture shall not be cause for non-acceptance.

Should the joint system exhibit evidence of water leakage at any place whatsoever, the Contractor shall locate the place(s) of leakage and take all measures necessary to stop the leakage. The repair procedure shall be recommended by the manufacturer and approved by the Engineer. This work shall be done at the Contractor's expense. A subsequent water integrity test shall be performed subject to the same conditions and consequences as the original test.

Method of Measurement

4.1 Prefabricated compression seal expansion joint will not be measured but shall be the linear foot (linear meter) final pay quantities in accordance with 109.11 for expansion joint required as shown on the plans.

4.2 Prefabricated compression seal expansion joint with plow plates will not be measured but shall be the linear foot (linear meter) final pay quantities in accordance with 109.11 for expansion joints required as shown on the plans.

Basis of Payment

5.1 Prefabricated compression seal expansion joint are final pay quantity items and will be paid for at the Contract unit price per linear foot (linear meter) complete in place in accordance with 109.11.

5.2 Prefabricated compression seal expansion joint with plow plates are final pay quantity items and will be paid for at the Contract unit price per linear foot (linear meter) complete in place in accordance with 109.11.

Pay item and unit:

560.10XX	Prefabricated Compression Seal Expansion Joint (F)	Linear Foot (Linear Meter)
560.12XX	Prefabricated Compression Seal Expansion Joint w/Plow Plates (F)	Linear Foot (Linear Meter)
560.13XX	Prefabricated Compression Seal Expansion Joint – Rehabilitation (F)	Linear Foot (Linear Meter)

S U P P L E M E N T A L S P E C I F I C A T I O N

AMENDMENT TO SECTION 561– PREFABRICATED EXPANSION JOINT

This supplemental specification replaces Section 561 – Prefabricated Expansion Joint.

Replace Section 561 with the following:

Description

1.1 This work shall consist of fabricating, furnishing and installing a watertight prefabricated expansion joint system utilizing one of the following: (a) single preformed elastomeric strip seal with steel locking extrusions (edge rails), (b) single preformed elastomeric strip seal with steel locking extrusions (edge rails) and plow plates, (c) prefabricated finger joint, (d) modular bridge joint system (MBJS) in accordance with the contract plans, specifications and the manufacture's recommendations.

Materials

2.1 Preformed Elastomeric Strip Seal Expansion Joint System. The single preformed elastomeric strip seal joint systems with steel locking extrusions (edge rails) shall conform to the requirements of ASTM D5973, meet the configuration as shown on the plans, and be a product as included on the Qualified Products List. Each seal shall be furnished full length. Splices in the length of an individual seal will not be permitted unless the splices are made at the plant by the manufacturer of the seal with the approval of the Department. The seal material shall be identified with the production date, manufacturer's name or trademark, and lot number.

2.1.1 Steel members. Steel members for the preformed elastomeric strip seal expansion joint system and plow plates shall conform to specifications AASHTO M 223/M 223M (ASTM A 572/A 572M) Grade 50. Minor steel plates and extrusions may conform to specifications AASHTO M 183/M 183M (ASTM A 36/A 36M).

2.1.1.1 Studs shall meet the requirements of AASHTO M 169 (ASTM A 108).

2.1.1.2 All steel members shall be galvanized conforming to Section 550.2.9 and Section 708, Appendix A, 3.2.3, 3.2.4 and 3.2.5. If distortion becomes an issue, an approved zinc rich coating shall be used as approved by the Engineer.

2.1.1.3 Anchorage of the preformed elastomeric strip seal expansion joint to the backwall and deck, between the curb lines, shall be made using a loop rebar attached to a joint support plate and shall be spaced at 1'-0" (300 mm) maximum, as shown on the plans. Brush curb and sidewalk anchorage shall be made of stud anchors and shall be spaced at 1'-6" (460 mm) maximum, as shown on the plans. The anchorage reinforcement shall extend into the backwall or curb reinforcement cage for proper anchorage.

2.1.2 Lubricant adhesive. Lubricant adhesive shall be a one-part moisture curing polyurethane and aromatic hydrocarbon solvent mixture meeting the requirements of ASTM D4070 for use in lubricating preformed bridge seals for insertion and adhesion to metal and concrete surfaces.

2.1.2.1 Each lot of adhesive shall be delivered in containers plainly marked with the manufacturer's name or trademark and shall be accompanied by the manufacturer's affidavit attesting conformance with the specification.

2.1.3 Bolts for Plow Plates and Anchor Rods.

2.1.3.1 Bolts for the plow plates in roadway shall be ¾" diameter high-strength hexhead bolts conforming to ASTM A325, galvanized.

2.1.3.2 Anchor rods shall conform to ASTM 307, galvanized.

2.2 Prefabricated Finger Joint System. The prefabricated finger joint system shall meet the configuration and details as shown on the plans.

2.2.1 Steel members. Steel members for the prefabricated finger joint system shall conform to specifications AASHTO M 223/M 223M (ASTM A 572/A 572M) Grade 50. Minor steel plates may conform to specifications AASHTO M 183/M 183M (ASTM A 36/A 36M).

2.2.1.1 Studs shall meet the requirements of AASHTO M 169 (ASTM A 108).

2.2.1.2 All steel members shall be galvanized conforming to Section 550.2.9 and Section 708, Appendix A, 3.2.3, 3.2.4 and 3.2.5. If distortion becomes an issue, an approved zinc rich coating shall be used as approved by the Engineer.

2.2.1.3 Anchorage of the prefabricated finger joint to the backwall and deck, between the curb lines, shall be made using a loop rebar attached to a joint support plate and shall be spaced at 1'-0" (300 mm) maximum, as shown on the plans. Brush curb and sidewalk anchorage shall be made of stud anchors and shall be spaced at 1'-6" (460 mm) maximum, as shown on the plans. The anchorage reinforcement shall extend into the backwall or curb reinforcement cage for proper anchorage.

2.2.2 Fabric trough. The preformed fabric trough shall be a product as included on the Qualified Products List and shall be a multi-layer sheet composed of multi-plies of 15 oz. per square yard (5%) polyester laminated with butadiene acrylonitrile and vulcanized to form an integral laminate, meeting the following requirements:

Physical Properties	
Number of Plies	3
Minimum Weight of Laminate (lbs/sq. ft.)	0.85
Minimum Thickness (inches)	5/32
Minimum Ultimate Tensile Strength of Laminate ((lbs/in) of width)	1,200
Maximum Elongation at Ultimate Tensile Strength	30%
Maximum Elongation at 1/10 Ultimate Tensile Strength	3%

2.2.3 Bolts and Anchor Rods.

2.2.3.1 Bolts in roadway plates shall be ¾" diameter high-strength hexhead bolts conforming to ASTM A325, galvanized.

2.2.3.2 Bolts in curb or sidewalk plates shall be ¾" diameter countersunk head bolts with socket head and conforming to ASTM A276, Type 304, stainless steel.

2.2.3.3 Anchor rods shall conform to ASTM 307, galvanized.

2.3 Modular Bridge Joint System (MBJS). The modular bridge joint system shall be designed in accordance the current AASHTO LRFD Bridge Design Specifications, Article 14.5, "Bridge Joints", and meet the current AASHTO LRFD Bridge Construction Specifications, Section 19, "Bridge Deck Joint Seal". The MBJS shall be prequalified by satisfying all testing requirements detailed in the current AASHTO LRFD Bridge Construction Specifications, Appendix A19. MBJS shall meet the configuration as shown on the plans and shall be a product as included on the Qualified Products List.

2.3.1 Steel members. Steel members for the modular bridge joint system shall conform to specifications AASHTO M 223/M 223M (ASTM A 572/A 572M) Grade 50. Minor steel plates may conform to specifications AASHTO M 183/M 183M (ASTM A 36/A 36M).

2.3.1.1 Studs shall meet the requirements of AASHTO M 169 (ASTM A 108).

2.3.1.2 All steel members shall be galvanized conforming to Section 550.2.9 and Section 708, Appendix A, 3.2.3, 3.2.4 and 3.2.5. If distortion becomes an issue, an approved zinc rich coating shall be used as approved by the Engineer.

2.3.1.3 Anchorage of the modular bridge joint system to the backwall and deck, between the curb lines, shall be made using a loop rebar attached to a joint support plate and shall be spaced at 1'-0" (300 mm) maximum, as shown on the plans. Brush curb and sidewalk anchorage shall be made of stud anchors and shall be spaced at 1'-6" (460 mm) maximum, as shown on the plans. The anchorage reinforcement shall extend into the backwall or curb reinforcement cage for proper anchorage.

2.3.2 Lubricant adhesive. Lubricant adhesive shall be a one-part moisture curing polyurethane and aromatic hydrocarbon solvent mixture meeting the requirements of ASTM D4070 for use in lubricating preformed bridge seals for insertion and adhesion to metal and concrete surfaces.

2.3.2.1 Each lot of adhesive shall be delivered in containers plainly marked with the manufacturer's name or trademark and shall be accompanied by the manufacturer's affidavit attesting conformance with the specification.

2.3.3 Preformed elastomeric strip seal. Preformed elastomeric strip seal joint system with steel locking extrusions (edge rails) shall conform to the requirements of ASTM D5973, meet the configuration as shown on the plans, and be a product as included on the Qualified Products List. Each seal shall be furnished full length. Splices in the length of an individual seal will not be permitted unless the splices are made at the plant by the manufacturer of the seal with the approval of the Department. The seal material shall be identified with the production date, manufacturer's name or trademark, and lot number.

2.3.4 Urethane foam shall conform to ASTM D3574.

2.3.5 Polytetrafluorethylene (PTFE) shall be 100% Virgin Teflon, woven PTFE fabric, or dimpled PTFE conforming to the requirements of the current AASHTO LRFD Bridge Construction Specifications, Section 18.8 and shall be provided on every sliding surface.

2.3.6 Stainless steel sheets shall conform to ASTM A240/A240M, Type 304, and shall be provided on every sliding surface. ASTM A240/A240 M, Type 316 shall be used for a severe environment.

2.3.7 Springs, bearings, and equidistance devices (control springs) shall be the same material composition and formulation, manufacturer, fabrication procedure, and configuration as the ones used in the prequalification test.

Construction Requirements

3.1 General. The expansion joint assembly shall be fabricated at an AISC certified plant with a certification in accordance to Section 550.3.2.

3.1.1 For a MBJS, the manufacturer shall have a minimum of three years experience in designing and fabricating modular bridge expansion joint systems. The Contractor shall provide written certification of the manufacturer's experience.

3.2 Fabrication.

3.2.1 Submittals. Shop fabrication drawings showing all details of the complete expansion joint assembly such as dimensions, anchorages, and welding procedures shall be submitted for approval in accordance with 105.02. Approval of the shop fabrication drawings shall be required prior to the manufacture of the assembly. Detailed welding procedures shall be considered an integral part of shop fabrication drawings and shall be submitted for approval along with the shop fabrication drawings. The shop fabrication drawings shall indicate the welding procedure to be used for each weld shown. The name of the manufacturer of the preformed elastomeric strip seal shall be shown on the shop fabrication drawings. Original shop fabrication drawings, corrected, shall be delivered to the Department before the final payment is made.

3.2.1.1 The manufacturer instructions for the proper installation of the joint system shall be shown on the shop drawings. Shop drawings that lack the manufacturer installation instruction, may be returned without approval.

3.2.1.2 For modular bridge joint systems, the Contractor shall submit details of the MBJS to be used together with installation and waterproofing plans for approval in accordance with 105.02 prior to fabrication. The shop fabrication drawings shall be in accordance with Section 3.2.1 and the current AASHTO LRFD Bridge Construction Specifications, Section 19.

3.2.1.3 For modular bridge joint systems, the Contractor shall submit test reports and certificates of the MBJS in accordance with the current AASHTO LRFD Bridge Construction Specifications, Section 19, for review and approval in accordance with 105.02 prior to fabrications. The Contractor shall also submit documentation of a Quality Assurance Inspection program performed by an independent inspection agency provided by the manufacturer. The name of the independent inspection agency, details of the proposed quality assurance inspection

program including inspection frequency, and all applicable reporting forms shall be submitted prior to the start of fabrications.

3.2.2 Fabrication and workmanship shall be performed in accordance with the applicable provisions of 550.3.

3.2.3 Preblast. All steel elements shall be blast cleaned before fabrication in conformance with the requirements of SSPC-SP 10, Near White Blast Cleaning. At the fabricators option, surfaces to be welded may be ground to bare metal. If the product is to be galvanized, blasting is not required before galvanizing.

3.2.4 Welding of steel shall be performed in accordance with 550.3.6. Welding shall be performed by prequalified welders and welding operators.

3.2.5 Stud Welding.

3.2.5.1 Studs shall be welded using automatically-timed stud welding equipment in accordance with AASHTO Welding Specifications, Section 7 (see Section 550.3.6.10). Welding by SMAW is an option only if approved by the Department.

3.2.5.2 Automatic equipment. Studs shall be welded with automatically timed stud welding equipment connected to a suitable source of direct current straight polarity power. Welding voltage, current, time, and gun settings for lift and plunge should be set at optimum settings, based on past practice, recommendations of stud and equipment manufacturer, or both. AWS C5.4, Recommended Practices for Stud Welding, should also be used for technique guidance.

3.2.5.3 Testing. The first two welded studs installed and ten percent (10%) of the remaining studs shall be tested. The test shall consist of bending the studs, after they are allowed to cool, to an angle of approximately 15 degrees from their original axes by either striking the studs on the head with a hammer or placing a pipe or other suitable hollow device over the stud and manually or mechanically bending the stud. If any studs fail the test, then all studs shall be tested. Acceptable bent studs shall be left in the bent position.

3.2.6 Shipping and adjusting devices required to ship, install, and adjust the joint assembly on the bridge shall be provided at approximately 4 ft. (1 m) spacing and shall be furnished and installed by the fabricator.

3.2.7 The joint system shall be fabricated by the manufacturer and delivered to the bridge site completely assembled, unless otherwise specified in the contract documents. For single preformed elastomeric strip seal expansion joint systems, the preformed elastomeric strip seal will be shipped concurrent with the joint system and will be clearly identified as the joint location corresponding to the strip seal.

3.3 Inspection.

3.3.1 Notice. The fabricator shall give ample notice (two weeks minimum) of the beginning of work so that arrangements can be made for inspection. No materials shall be fabricated before the Engineer has been so notified.

3.3.2 The Department will inspect the fabrication of expansion joints. This inspection will include the examination of materials, welding, testing, work procedures, painting, and the final fabricated product.

3.3.3 The Engineer may waive shop inspection and make a complete inspection at a later stage in the construction sequence.

3.3.4 The Engineer shall visually inspect the seal material to confirm size, configuration, and identify possible defects in seal due to manufacturing or shipment. Any seal with defects shall be replaced at the Contractor's costs.

3.3.5 When the materials are deliverd to the job site, the manufacturer shall provide a certification to the Engineer that all materials meet the specification requirements.

3.3.6 Pre-installation inspection. Immediately prior to installation, the Engineer shall inspect the MBJS and the blockout for the following:

(a) Proper alignment.
(b) Complete bond between the seals and the steel.
(c) Proper placement and effectiveness of studs or other anchorage devices.
(d) The proper placement of waterproofing membranes shall be verified, if utilized.
(e) The clearance specified on the drawings (3.0 inches [75 mm] is recommended) between the bottoms of the support boxes of MBJS and the surface of the blockout should be verified.
(f) Conformance with the current AASHTO LRFD Bridge Construction Specifications, Section 19.5.4.2.

3.4 Installation. The joint assembly shall be installed in the bridge as shown on the plans, in strict accordance with the manufacturer's written instructions along with the advice of their qualified representative. Installation of MBJS shall also be installed be in accordance with the current AASHTO LRFD Bridge Construction Specifications, Section 19.5.

3.4.1 For the installation of MBJS, a qualified installation technician shall be present at the job site to assure a proper installation of each expansion joint system. This technician shall be a full time employee of the manufacturer of the specific expansion joint system being installed. The Contractor shall comply with all recommendations made by the expansion joint manufacturer's installation technician as approved by the Engineer. Each expansion joint system manufacturer's installation technician shall certify to the Engineer that the Contractor properly followed the approved installation procedures. All certifications to the Engineer shall be in writing and shall be signed and dated by the manufacturer's installation technician.

3.4.2 Class AA concrete shall be placed as blockout filler as directed.

3.4.3 The joint system shall be set to line and grade, with vertical offset as detailed on the plans, ensuring that the system's uppermost plane parallels the finished roadway profile.

3.4.4 In order for the expansion joint to be installed properly, it must be set at a width that is directly dependent upon the ambient temperature at the start of installation under the direction of the Engineer, as shown on the contract plans. The width setting shall be accomplished through the use of mechanical devices supplied by the fabricator.

3.4.5 Cleaning the mating surfaces of the steel elements shall be performed just prior to installing the seal. The steel and seal surfaces shall be cleaned in accordance with the manufacturer's recommendations.

3.4.6 Immediately after the joint has been secured to the structural steel and the abutment, the shipping and adjustment devices shall be removed and any bolt holes plug welded. Any welds on exposed surfaces shall be ground smooth. Repair any damaged galvanized surfaces according to Section 550.2.9.1.

3.4.7 For a finger expansion joint system, a water collection and drainage system shall be located as shown on the plans. The drainage system shall catch and channel all water to a point where it can be discharged away from the superstructure and substructure.

3.4.7.1 The hopper and downspout shall be secured to the concrete substructure at 10-foot (3 meters) intervals (maximum) or as shown on the plans or as directed by the Engineer.

3.4.8 Watertight Integrity Test for the Strip Seal Expansion Joint System. After the joint system has been fully installed, the Contractor shall test the entire (full length) joint system for watertight integrity employing a method satisfactory to the Engineer. The entire joint system shall be covered with water, either ponded or flowing, for a minimum duration of 15 minutes. The concrete surfaces under the joint shall be inspected, during this 15 minute period and also for a minimum of 45 minutes after the supply of water has stopped, for any evidence of dripping water or moisture. Water tightness shall be interpreted to be no free dripping water on any surface on the underside of the joint. Patches of moisture shall not be cause for non-acceptance.

Should the joint system exhibit evidence of water leakage at any place whatsoever, the Contractor shall locate the place(s) of leakage and take all measures necessary to stop the leakage. The repair procedure shall be recommended by the manufacturer and approved by the Engineer. This work shall be done at the Contractor's expense. A subsequent water integrity test shall be performed subject to the same conditions and consequences as the original test.

3.4.9 Watertight Integrity Test for the Fabric Trough of the Finger Expansion Joint. After the joint system has been fully installed, the Contractor shall test the entire length of the fabric trough for watertight integrity employing a method satisfactory to the Engineer. The entire joint system shall be covered with flowing water for a minimum duration of 15 minutes. The fabric trough, during this 15 minute period, shall be inspected for any evidence of dripping or splashing water. Water tightness shall be interpreted as all free dripping water is collected into the fabric trough and flows down the trough into the downspout. No free dripping water shall be outside the trough or splashing occurring at the entrance to the downspout.

Should the expansion joint exhibit evidence of water not being collected in the trough at any place whatsoever, the Contractor shall locate the problem place(s) and take all measures necessary to ensure that the fabric trough will collect all the water. The repair procedure shall be approved by the Engineer. This work shall be done at the Contractor's expense. A subsequent water integrity test shall be performed subject to the same conditions and consequences as the original test.

3.4.10 Watertight Integrity Test for the MBJS. After the joint system is installed and completed, the MBJS shall be flooded for a minimum of 1 hour to a minimum depth of 3.0 inches [75 mm], in accordance with the current AASHTO LRFD Bridge Construction Specifications, Section 19.5. For phase construction, the MBJS shall be flooded as noted above, for each completed phase. If leakage is observed, the MJBS shall be repaired to the Engineer's satisfaction and retested at the Contractor's expense. The repair procedure shall be recommended by the manufacturer and approved by the Engineer.

Method of Measurement

4.1 Prefabricated expansion joints, of the type specified, will not be measured, but shall be the linear foot (linear meter) final pay quantities in accordance with 109.11 for prefabricated expansion joints required as shown on the plans.

Basis of Payment

5.1 Prefabricated expansion joints, of the type specified, are final pay quantity items and will be paid for at the Contract unit price per linear foot (linear meter) complete in place in accordance with 109.11

Pay items and units:

561.10XX	Prefabricated Strip Seal Expansion Joint (F)	Linear Foot (Linear Meter)
561.12XX	Prefabricated Strip Seal Expansion Joint w/ Plow Plates (F)	Linear Foot (Linear Meter)
561.13XX	Prefabricated Strip Seal Expansion Joint Rehabilitation (F)	Linear Foot (Linear Meter)
561.20X	Prefabricated Modular Bridge Joint System (F)	Linear Foot (Linear Meter)
561.23X	Prefabricated Modular Bridge Joint System - Rehabilitation (F)	Linear Foot (Linear Meter)
561.30X	Prefabricated Finger Expansion Joint (F)	Linear Foot (Linear Meter)
561.33X	Prefabricated Finger Expansion Joint - Rehabilitation (F)	Linear Foot (Linear Meter)